Operation/Maintenance Manual

for

Model 5300-S3412A

Resolver/Synchro Standard

TM-I-6012

© North Atlantic Instruments, Inc. 1998

STATUS OF PUBLICATION

Publication No. TM-I-6012

Original - July 1998

WARNING

High Voltage exists at several points in the instrument. Normal precautions consistent with good practice should be taken to reduce shock hazard.

A potential shock hazard exists when ungrounded power source or ungrounded case operation is employed. Persons operating the instrument should be made aware of and take precautions against this condition.

North Atlantic Instruments, Inc. cannot be held responsible for damage to person or property in the process of or as a result of maintenance, calibration, or setting up of the instrument.

SOFTWARE CONTAINED IN THIS EQUIPMENT HAS BEEN
COPYRIGHTED BY NORTH ATLANTIC INSTRUMENTS, INC.
1998

Table of Contents

Para. No.	Title	Page
	Chapter 1 - Introduction	1-1
1.1	General	1-1
1.2	Scope	1-1
1.3	Introduction	1-1
1.4	Description	1-1
1.5	Safety	1-3
1.6	Specifications	1-4
1.7	Equipment/materials supplied	1-7
1.8	Statement of warranty	1-8
1.8.1	Limited Warranty	1-8
1.8.2	Claims for damage in shipment	1-8
1.8.3	Shipping	1-8
	Chapter 2 - Installation	2-1
2.1	General	2-1
2.2	Unpacking and inspection	2-1
2.3	Mechanical	2-1
2.4	Line voltage selection	2-1
2.5	Front panel terminals	2-1
2.6	Rear panel terminals	2-1
2.6.1	Terminal block	2-4
2.6.2	J23 IEEE-488 cable installation	2-4
2.6.3	J22 Instrument interface cable installation (Optional)	2-4
2.7	Grounding	2-4
2.8	Installation	2-5
2.8.1	Bench installation	2-5
2.8.2	Rack mount installation	2-5

Table of Contents (Cont'd.)

Para. No.	*Title*	*Page*
	Chapter 3 - Operation	3-1
	Section I. Controls and Indicators	3-1
3.1	Introduction	3-1
3.2	Numeric displays	3-1
3.2.1	Main display	3-1
3.2.2	Amplitude display	3-1
3.2.3	Frequency display	3-1
3.3	Indicators	3-1
3.3.1	SYN indicator	3-1
3.3.2	RES indicator	3-2
3.3.3	PHASE OFFSET indicator	3-2
3.3.4	SINE WAVE indicator	3-2
3.3.5	TRIANGLE WAVE indicator	3-2
3.3.6	SQUARE WAVE indicator	3-2
3.3.7	ROTATION indicator	3-2
3.3.8	OVERLOAD indicator	3-2
3.3.9	°/S indicator	3-2
3.3.10	DEG indicator	3-2
3.3.11	Hz indicator	3-2
3.3.12	INT REF indicator	3-2
3.3.13	EXT REF indicator	3-2
3.3.14	OOR indicator	3-2
3.3.15	CAL indicator	3-2
3.3.16	SRQ indicator	3-2
3.3.17	LISTEN indicator	3-2
3.3.18	TALK indicator	3-2
3.3.19	REM indicator	3-2
3.3.20	V_{REF} indicator	3-2

Table of Contents (Cont'd.)

Para. No.	*Title*	*Page*
3.3.21	V_{L-L} indicator	3-2
3.3.22	Hz indicator	3-2
3.3.23	KHz indicator	3-2
3.4	Keyboard controls	3-2
3.4.1	Output controls	3-2
3.4.1.1	ANGLE switch	3-2
3.4.1.2	SYN/RES switch	3-3
3.4.1.3	AMPL switch	3-3
3.4.1.4	INCR switch	3-3
3.4.2	Reference controls	3-4
3.4.2.1	INT/EXT switch	3-4
3.4.2.2	FREQ switch	3-4
3.4.2.3	AMPL switch	3-4
3.4.2.4	PHASE switch	3-4
3.4.3	Modulation controls	3-4
3.4.3.1	MODE switch	3-4
3.4.3.2	FREQ switch	3-5
3.4.3.3	AMPL switch	3-5
3.4.3.4	VEL switch	3-5
3.4.4	Miscellaneous controls	3-5
3.4.4.1	CAL switch	3-5
3.4.4.2	STORE switch	3-5
3.4.4.3	HOLD switch	3-5
3.4.4.4	LOCAL switch	3-6
3.4.4.5	UP switch	3-6
3.4.4.6	DOWN switch	3-6
3.4.4.7	INCREMENT knob	3-6
3.4.4.8	ENTER switch	3-6
3.4.4.9	CLEAR switch	3-6
3.4.4.10	+/- switch	3-6

Table of Contents (Cont'd.)

Para. No.	*Title*	*Page*
3.4.4.11	0 - 9 and . switches	3-6
3.5	Setting up the reference	3-6
3.6	Phase shifting the output signals	3-6
3.7	Setting the line-to-line voltage	3-7
3.8	Setting the output angle	3-7
3.9	Sine wave modulation	3-8
3.10	Triangle modulation	3-8
3.11	Square wave modulation	3-9
3.12	Continuous rotation	3-10
	Section II. CASS Programming Mode	3-11
3.13	General	3-11
3.13.1	Interface functions supported	3-11
3.13.2	Setting IEEE-488 bus address	3-11
3.14	Command format	3-11
3.14.1	ANGLE command	3-12
3.14.2	FUNCTION command	3-12
3.14.3	SYNCHRO command	3-12
3.14.4	RESOLVER command	3-12
3.14.5	INTERNAL REFERENCE command	3-12
3.14.6	EXTERNAL REFERENCE command	3-12
3.14.7	PHASE SHIFT 0° command	3-12
3.14.8	PHASE SHIFT command	3-12
3.14.9	STATIC ANGLE command	3-12
3.14.10	DYNAMIC ANGLE command	3-12
3.14.11	SIGNAL VOLTAGE commands	3-12
3.14.12	REFERENCE VOLTAGE commands	3-13
3.14.13	REFERENCE FREQUENCY commands	3-13
3.14.14	DYNAMIC MODE commands	3-13
3.14.15	PRESET command	3-13

Table of Contents (Cont'd.)

Para. No.	*Title*	*Page*
3.14.16	LATCH DATA command	3-14
3.14.17	CALIBRATION command	3-14
	Chapter 4 - Principles of Operation	4-1
4.1	Scope	4-1
4.2	Synchro and resolver conventions	4-1
4.2.1	Synchro transmitter conventions	4-1
4.2.2	Resolver transmitter conventions	4-1
4.3	System level principles of operation	4-2
4.3.1	Analog Board	4-2
4.3.2	Sine/cosine board	4-2
4.3.3	System board	4-2
4.3.4	Display/keyboard assembly	4-2
4.3.5	Power supply system	4-4
4.3.5.1	Main power supply board	4-4
4.3.5.2	Isolated power supply	4-4
4.3.6	Software overview	4-4
4.3.6.1	Startup code	4-4
4.3.6.2	Operational code	4-4
4.4	Functional level principles of operation	4-5
4.4.1	Analog board	4-5
4.4.1.1	Internal reference output	4-7
4.4.1.2	Sine/cosine board input	4-7
4.4.1.3	Measurement/calibration circuits	4-7
4.4.2	Sine/cosine board	4-8
4.4.3	System board	4-8
4.4.3.1	CPU	4-8
4.4.3.2	System FPGA	4-12
4.4.3.3	Interface U31	4-12
4.4.3.4	EPROM U21, U22	4-12

Table of Contents (Cont'd.)

Para. No.	*Title*	*Page*
4.4.3.5	EEPROM U9	4-12
4.4.3.6	RAM U1, U14	4-12
4.4.3.7	Display FPGA U29, U48	4-12
4.4.3.8	Angle DSP U2	4-12
4.4.3.9	Reference DSP U4	4-12
4.4.3.10	Sine/cosine board control registers U53, U54,U61	4-12
4.4.3.11	Sine register	4-12
4.4.3.12	Cosine register	4-12
4.4.3.13	Angle register	4-12
4.4.4	Display/Keyboard assembly	4-12
4.4.5	Main power supply board	4-14
4.4.5.1	+5 Vdc circuits	4-14
4.4.5.2	±15 Vdc circuits	4-14
4.4.5.3	Time delay	4-14
4.4.5.4	±48 Vdc circuits	4-14
4.4.5.5	±175 Vdc circuits	4-16
4.4.5.6	High voltage overload sense circuit	4-16
4.4.6	Isolated power supplies	4-16
4.4.6.1	±15 Vdc circuits	4-16
4.4.6.2	±48 Vdc circuits	4-16
4.4.6.3	±20 Vdc circuits	4-16
4.4.6.4	±150 Vdc circuits	4-17
4.4.6.5	High voltage overload sense circuit	4-17
	Chapter 5 - Maintenance	5-1
	Section I. Preventive Maintenance	5-1
5.1	General	5-1
5.2	Equipment/materials required	5-3
5.3	Scope of section I	5-3
5.4	Schedule	5-3

Table of Contents (Cont'd.)

Para. No.	*Title*	*Page*
5.5	Cleaning	5-3
5.5.1	General cleaning	5-3
5.5.2	Specific cleaning	5-3
	Section II. Performance Test	5-5
5.6	Scope of section II	5-5
5.7	Performance test	5-5
	Section III. Fault Isolation	5-43
5.8	Scope of section III	5-43
5.9	Error code messages	5-49
	Section IV. Corrective Maintenance	5-53
5.10	Scope of section IV	5-53
5.11	Removal and replacement	5-53
5.11.1	Calibration bridge transformer assembly	5-54
5.11.2	Interconnect board assembly	5-54
5.11.3	Isolation/tapped transformer assembly	5-54
5.11.4	Sine/cosine board assembly	5-54
5.11.5.	Analog board assembly	5-55
5.11.6	Isolated power supply	5-55
5.11.7	Display/keyboard assembly	5-55
5.11.8	Isolation power transformer assembly	5-55
5.11.9	Main power supply board assembly	5-55
5.11.10	Main transformer assembly	5-56
5.11.11	Power entry module assembly	5-56
5.11.12	System board assembly	5-57
5.11.13	Fan assembly	5-57
5.11.14	Terminal block	5-57
5.11.15	System board integrated circuit removal/replacement	5-57
5.11.16	Extender frame assembly installation	5-58

Table of Contents (Cont'd.)

Para. No.	*Title*	*Page*
5.11.17	Fuse replacement	5-58
	Section V. Test and Adjustments	5-59
5.12	Scope of section V	5-59
5.13	Tools and test equipment	5-59
5.14	Test and adjustment procedures	5-59
5.14.1	Sine/cosine board test and adjustment	5-60
5.14.2	Analog board alignment test and adjustment	5-60
5.14.3	Isolated power supply voltage check	5-61
5.14.4	Main power supply board assembly voltage check and adjustment	5-61
	Chapter 6 - Parts List	6-1
6.1	General	6-1
6.2	Parts list	6-1
6.2.1	REF DES (Reference Designation)	6-1
6.2.2	Description/Vendor Part No	6-1
6.2.3	NAI P/N	6-1
6.2.4	QTY (Quantity)	6-1
	Chapter 7 - Diagrams	7-1
7.1	General	7-1
7.2	Diagrams	7-1
	Glossary	Glossary -1

List of Tables

No.	*Title*	*Page*
1-1	RSS assemblies and reference designations	1-3
1-2	RSS specifications	1-4

List of Tables (Cont'd.)

No.	*Title*	*Page*
1-3	Equipment/materials supplied	1-7
1-4	Optional test equipment, tools, and materials required	1-7
2-1	Front panel terminals	2-3
2-2	Terminal block connections	2-3
2-3	J23 IEEE-488 Pin assignments	2-6
2-4	Optional J22 pin assignments	2-6
3-1	IEEE-488 Interface functions and descriptions	3-11
3-2	Commands	3-15
5-1	Equipment/material required for Maintenance	5-1
5-2	PM schedule	5-1
5-3	Performance test	5-4
5-4	Fault isolation	5-44
5-5	Error codes	5-49
5-6	IC insertion/extraction tools	5-58
5-7	Special material and test equipment	5-59
5-8	Isolated power supply voltage checks	5-61
5-9	Initial main power supply voltage checks	5-62
5-10	Final voltage checks	5-62
6-1	Chassis assembly parts	6-3
6-2	System board assembly A1 parts list	6-9
6-3	Sine/Cosine board assembly A2 parts list	6-15
6-4	Analog board assembly A3 parts list	6-23
6-5	Main power supply board assembly A4 parts list	6-35
6-7	Display/keyboard assembly A5 parts list	6-43
6-7	Isolated power supply board assembly A6, A7 parts list	6-47
6-8	Interconnect board assembly A8 parts list	6-53
7-1	RSS Resolver/snchro/standard diagrams	7-1

List of Illustrations

No.	*Title*	*Page*
1-1	RSS assembly location	1-2
2-1	RSS outline and dimension drawing	2-2
2-2	RSS rear panel terminals	2-4
3-1	Front panel displays and indicators	3-1
3-2	Front panel controls	3-3
3-3	Sine wave modulation	3-8
3-4	Triangle wave modulation	3-8
3-5	Square wave modulation	3-9
4-1	Synchro transmitter schematic	4-1
4-2	Resolver transmitter schematic	4-2
4-3	System block diagram	4-3
4-4	Analog board block diagram	4-6
4-5	Sine/cosine board block diagram	4-9
4-6	System board block diagram	4-11
4-7	Display/keyboard block diagram	4-13
4-8	Main power supply board block diagram	4-15
4-9	Isolated power supply block diagram	4-18
5-1	Performance test flow chart	5-7
5-2	Test set-up, external input/output L-L tests	5-14
5-3	Test set-up, internal reference AC voltage tests	5-16
5-4	Test set-up, phase offset tests	5-18
5-5	Test set-up, DC offset tests	5-21
5-6	Test set-up, synchro tests	5-25
5-7	Synchro equations (A)	5-26
5-8	Test set-up for resolver	5-31
5-9	Resolver equations (A)	5-32
5-10	Test set-up, static angular tests	5-37
5-11	Synchro equations (B)	5-41
5-12	Resolver equations (B)	5-41

List of Illustrations (Cont'd.)

No.	*Title*	*Page*
5-13	SRA location	5-53
5-14	Voltage measurement points, isolated P.S.	5-63
5-15	Voltage measurement points, main P.S	5-65
6-1	Chassis assembly	6-2
6-2	System board assembly	6-5
6-3	Sine/cosine board assembly	6-13
6-4	Analog board assembly	6-21
6-5	Main power supply assembly	6-33
6-6	Display/keyboard assembly	6-41
6-7	Isolated power supply assembly	6-45
6-8	Interconnect board assembly	6-51
7-1	System board A1, schematic diagram	
7-2	Sine/cosine board A2, schematic diagram	
7-3	Analog board A3, schematic diagram	
7-4	Main power supply assembly A4, schematic diagram	
7-5	Display/Keyboard assembly A5, schematic diagram	
7-6	Isolated power supply A6, A7, schematic diagram	
7-7	Analog Interconnect board A8, schematic diagram	
7-8	Analog card cage extender, schematic diagram	

CHAPTER 1
INTRODUCTION

1.1 GENERAL

This technical manual provides description, operation, and servicing instructions for the model 5300-S3412A programmable Resolver/Synchro Standard (RSS), manufactured by North Atlantic Instruments, Inc. (NAI), of Bohemia, New York. This manual is intended for maintenance personnel who operate and/or maintain the RSS.

1.2 SCOPE

The technical manual consists of seven chapters. Chapter 1, Introduction, introduces and describes the RSS, its purpose and capabilities. Figure 1-1 shows the major assemblies of the RSS, and table 1-1 lists their reference designations. Table 1-2 lists the RSS specifications and table 1-3 lists equipment and materials supplied with the RSS. Chapter 2, Installation, provides instructions for unpacking and inspecting the RSS prior to installation. The Installation procedures include bench mounting and mounting the RSS to a standard 19-inch equipment rack using the rack adapters provided. Repacking instructions for shipment or storage, and tables listing pin-outs for panel terminals and the IEEE-488 I/O connector are included. Chapter 3, Operation, consists of two sections. Section I describes and locates each control, switch, and indicator on the RSS. Section II describes the Consolidated Automatic Support System (CASS) programming language used to operate the RSS via the interface connector on the rear panel. Chapter 4, Principals of Operation, provides an overview of synchro and resolver conventions, software overview, and a system and functional block diagram description written to support an intermediate maintenance level. Chapter 5, Maintenance, consists of five sections. Section I contains a list of material and procedures for performing preventive maintenance. Section II contains the performance test used to check the accuracy and function of the RSS. Section III contains a fault isolation table used to detect and isolate defective shop replaceable assemblies (SRA) within the RSS. Section IV contains removal and replacement procedures for the SRA's. Section V contains test and adjustment procedures. Chapter 6, Parts List, contains illustrations to locate parts on the RSS, and detail part lists contain component description, part number and quantity used. Chapter 7, Diagrams, contain the schematic diagrams for the RSS. Following chapter 7 is a glossary and appendix A, Update Information. This appendix contains service bulletins, Tech-Tips, and repair data furnished periodically by the manufacturer to enhance RSS performance and facilitate service and repair.

1.3 INTRODUCTION

The RSS is a laboratory-grade instrument capable of simulating the output of a synchro or resolver. As such, the RSS may be used as a standard for calibrating or testing automatic test equipment (ATE), or used to measure angle position indicators (API) and synchro-to-digital converters. The output parameters can be varied and modulated over a wide range as determined by the operator. The RSS is self-contained and can be remotely controlled by a computer via the interface connector on the rear panel. The RSS has provision for sensing its applied output at the load and comparing it to its set output. In this manner, the RSS can automatically compensate for differences due to line losses.

The RSS may also use an external reference waveform. The external inputs utilize protected autoranging technology that make connection and setup safe, easy, and efficient. The RSS outputs completely isolate the load in the event of an overload.

1.4 DESCRIPTION

The RSS is a self-contained instrument within a

metal enclosure and consists of a front and rear panel assembly, system board, sine/cosine board, analog board, main power supply board, isolation power transformer, two isolation/tapped transformers, an interconnect board assembly, and two isolated power supply assemblies. The front panel houses the display/keyboard assembly, power on/off switch, and binding posts whereby synchro/resolver and external inputs and outputs may be connected. The rear panel houses the power entry module, cooling fan and filter assembly, main power transformer, terminal block, calibration bridge transformer, and IEEE-488 interface connector. Figure 1-1 locates the main assemblies of the RSS, and table 1-1 lists their assigned reference designation and NAI part number. The assembly reference designation is used to distinguish between components having the same designation on each assembly. For example, R1 on the sine/cosine board is designated A2R1 whereas R1 on the analog board is designated A3R1.

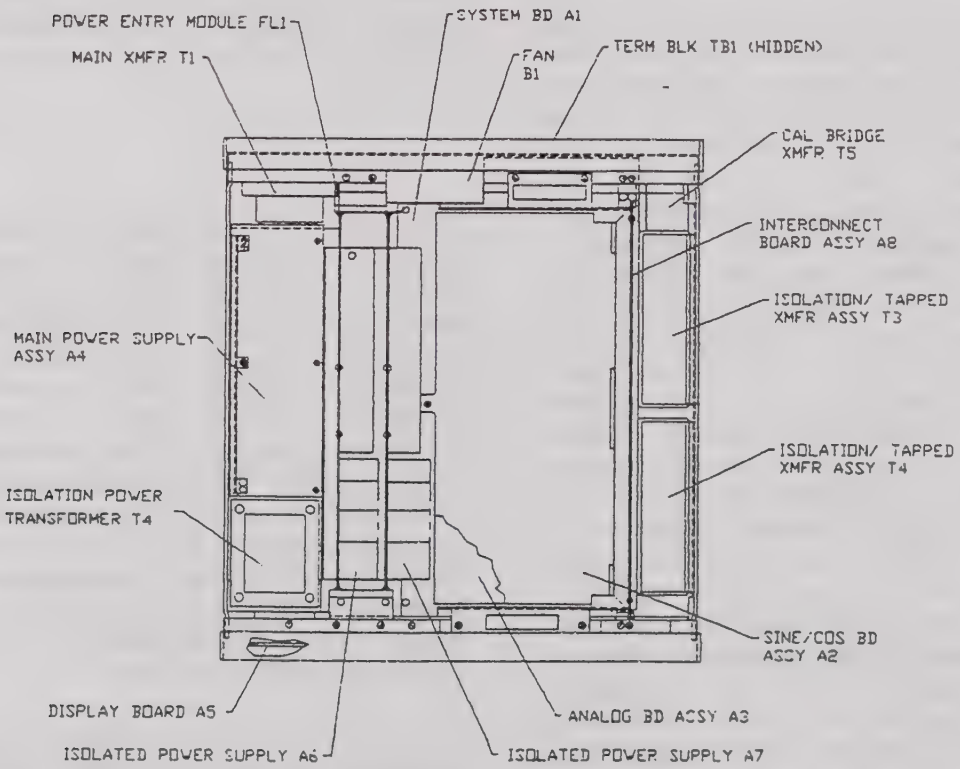

Figure 1-1. RSS Assembly Location

Table 1-1. RSS Assemblies and Reference Designations

REF DES	NOMENCLATURE	NAI P/N
A1	System Board Assembly	784009
A2	Sine/Cosine Board Assembly	784003-1
A3	Analog Board Assembly	784008-1
A4	Main Power Supply Board Assembly	784012
A5	Display Board Assembly	784006
A6, A7	Isolated Power Supply Assembly	784007
A8	Interconnect Board Assembly	784011
B1	Fan Assembly	784020
FL1	Power Entry Module Assembly	784019
TB1	Rear Terminal Block	549004
T1	Main Transformer Assembly	810117
T2	Isolation Power Transformer Assembly	810104
T3, T4	Isolation/Tapped Transformer Assembly	784021
T5	Calibration Bridge Transformer Assembly	784018

1.5 SAFETY

The RSS uses power that can cause physical injury or death if contacted. The following is a list of general safety precautions that should be observed when performing maintenance on the RSS. Observe all WARNINGS and CAUTIONS when they appear in this manual.

WARNING

INDICATES THAT PERSONAL INJURY OR DEATH MAY RESULT IF THE PROCEDURE IS NOT CORRECTLY FOLLOWED OR SAFETY PRECAUTIONS ARE NOT OBSERVED.

CAUTION

INDICATES THAT THE RSS MAY BE DAMAGED IF THE PROCEDURE IS NOT CORRECTLY FOLLOWED.

Observe the following general safety precautions:

LIVE CIRCUITS

USE EXTREME CAUTION WHEN PERFORMING MAINTENANCE OR MAKING ADJUSTMENTS WHEN POWER IS ON. NEVER TOUCH THE EQUIPMENT CHASSIS WITH YOUR FREE HAND WHILE TESTING, ADJUSTING, OR PERFORMING FAULT ISOLATION.

WORKING ALONE

IT IS UNSAFE TO WORK ALONE. ALWAYS ENSURE THAT SOMEONE IS PRESENT TO PERFORM FIRST AID OR BE ABLE TO CALL FOR HELP SHOULD AN EMERGENCY OCCUR.

The following WARNINGS and CAUTIONS appear in the manual and are repeated here for emphasis.

WARNING

DO NOT PLUG LINE CORD INTO AC RECEPTACLE AT THIS TIME. CONNECTION TO THE WRONG VOLTAGE SOURCE WILL CAUSE DAMAGE TO THE RSS AND MAY CAUSE INJURY OR DEATH OF THE OPERATOR (Chapt. 2, p. 1).

WARNING - DANGEROUS VOLTAGE!

TURN FRONT PANEL SWITCH OFF AND UNPLUG LINE CORD BEFORE PERFORMING THE PROCEDURES LISTED IN THIS SECTION (Chapt. 5, pp. 3, 53).

WARNING - DANGEROUS VOLTAGE!

DANGEROUS VOLTAGES ARE PRESENT WITHIN THE RSS. BE CAREFUL WHEN WORKING AROUND HIGH-VOLTAGE CIRCUITS. TO PREVENT ELECTRICAL SHOCK, DO NOT TOUCH THE RSS CHASSIS WITH ANY PART OF YOUR BODY. DO NOT PERFORM THESE PROCEDURES ALONE. MAKE SURE SOMEONE IS AVAILABLE TO GIVE YOU ASSISTANCE OR CALL FOR HELP (Chapt. 5, pp. 43, 59).

WARNING

DANGEROUS VOLTAGES PRESENT! USE EXTREME CARE WHEN PERFORMING THIS PROCEDURE (Chapt. 5, pp. 60 and 61.

CAUTION

THIS EQUIPMENT IS SENSITIVE TO DAMAGE BY ELECTROSTATIC DISCHARGE (ESD). ALWAYS USE ESD PRECAUTIONARY PROCEDURES WHEN HANDLING EQUIPMENT (Chapt. 5, pp 3, 43, 53, 59).

CAUTION

GRASP CONNECTOR, NOT RIBBON CABLE IN FOLLOWING STEP (Chapt. 5, pp. 55, 56, 57).

1.6 SPECIFICATIONS

Table 1-2 lists the specifications for the RSS.

Table 1-2. RSS Specifications

SPECIFICATION	SYNCHRO MODE	RESOLVER MODE
Reference Input		
Operating frequency range	60 Hz to 1 kHz	360 Hz to 1 kHz
Voltage Range:		
60 Hz to 1 kHz	2 to 115 V_{RMS}	
Input impedance	200 kohms minimum	
Reference Output		
Voltage range vs Frequency:		
60 Hz to 1 kHz	2 to 115 V_{RMS}	
Output impedance	< 0.25 ohms	
Voltage Accuracy	±3 % of setting	

Table 1-2. RSS Specifications

(Cont'd)

SPECIFICATION	SYNCHRO MODE	RESOLVER MODE
Voltage resolution	3 digits	
Output current:		
2 to 26 V_{RMS}	100 mA_{RMS} maximum	
>26 to 115 V_{RMS}	25 mA_{RMS} maximum	
DC Offset	5 mV maximum	
Phase shift range	0 to ±180° to 0.001° resolution	
Phase shift accuracy:		
60 to 1 kHz	±0.5°	
Outputs (isolated)		
Voltage Accuracy	2% of setting	
Voltage resolution	1% of setting minimum	
DC Offset	5 mV maximum	
Voltage range (line-to-line)	1 to 90 V_{RMS}	
Angular accuracy vs F:		
60 Hz (90 V_{L-L})	±0.000833°	—
400 Hz (11.8 V_{L-L})	±0.00055°	±0.000833°
400 Hz (26 V_{L-L})	-	±0.00055°
400 Hz (90 V_{L-L})	±0.00055°	-
800 Hz (11.8 V_{L-L})	-	±0.00055°
Other frequencies and V_{L-L}[(a)] combinations	±0.0011°	±0.000833°
Angular resolution	0.0001° (0.36 arc-sec)	
Output drive capability[(b)]:		
2 to 26 V_{RMS}	4 VA maximum limited to 330 mA_{RMS} maximum	
>26 to 90 V_{RMS}	4 VA maximum limited to 33 mA_{RMS} maximum	
Output impedance (maximum):		

Table 1-2. RSS Specifications

(Cont'd)

SPECIFICATION	SYNCHRO MODE	RESOLVER MODE
60 to 1 kHz	< 0.25 ohms	
Radius (sinusoidal) accuracy	±0.005 % typical	
Dynamic angular modulation		
Continuous (CW or CCW)	To 100,000°/sec (278 rps)	
Cyclical	Sine, triangle or square wave to 1 kHz or between preset angle	
Incremental	Successive equal angles on command	
Other		
Front panel control	Push buttons; additional rotary control for manual angular positioning	
Remote control	IEEE-488	
Temperature	0° C to 50° C operating,-40° C to 71° C storage per MIL-T-28800E, Type III, Class 6, Style E	
Dimensions	19" (48.3 cm) W x 3.5" (8.9 cm) H x 18 7/16" (48.8 cm) D, bench or rack mounting	
Power	115/220 VAC ±10%, 47 to 440 Hz, 115 VA	

[a] Applies for frequencies below 1000 Hz and also derates linearly from 6 V to 1 V

[b] 0° to 70° inductive load; outputs are overload and short-circuit protected

1.7 EQUIPMENT/MATERIALS SUPPLIED

Table 1-3 list the equipment and materials supplied with the RSS. Table 1-4 list the optional equipment and materials that are not supplied but required to perform maintenance and testing of the RSS.

Table 1-3. Equipment/Materials Supplied

DESCRIPTION	NAI MODEL/PART NUMBER
Resolver/Synchro Standard	Model 5300-S3412
Line cord	870165
Operation/Maintenance manual	TM-I-6004
115 V line fuse (2 A slo-blo)	800935
230 V line fuse (1 A slo-blo)	800118
Rack mounting handles (2)	210079

Table 1-4. Optional Test Equipment, Tools, and Materials Required

DESCRIPTION	MANUFACTURER/PART NUMBER*
Extender frame assembly	NAI 784014
Digital multimeter	Fluke 8506A
Oscilloscope	Tektronix 465
Oscillator	Krohn-Hite Model 4000AR
75-Watt Amplifier	Krohn-Hite Model 7500
Ratio Box	Electro Scientific Industries, Inc. - Model 73
Bridge Transformer	NAI Model TFI-0010
Synchro/Resolver bridge	NAI - Model 540/11
Digital Analyzing Voltmeter (DAV)	NAI Model 2250-F1

* Equivalent equipment is acceptable

1.8 STATEMENT OF WARRANTY

The RSS is warranted by NAI (seller) to the purchaser in accordance with the following terms and conditions.

1.8.1 LIMITED WARRANTY

The seller warrants products against defects in material and workmanship for twelve months from the date of original shipment. The seller's liability is limited to the repair or replacement of products which prove to be defective during the warranty period. There is no charge under the warranty except for transportation charges. The purchaser shall be responsible for products shipped until received by the seller.

The seller specifically excludes from the warranty 1) calibration, 2) fuses, 3) source inspection, 4) test data, 5) normal mechanical wear, e.g., end-of-life on assemblies such as switches, print heads, recording heads, etc., is dependent upon number of operations or hours of use, and end-of-life may occur within the warranty period.

The seller is not liable for consequential damage or for any injury or damage to persons or property resulting from the operation or application of products. The warranty is voided if there is evidence that products have been operated beyond their design range, improperly installed, improperly maintained, or physically mistreated. The seller reserves the right to make changes and improvements to products without any liability for incorporating such changes or improvements in any products previously sold, or for any notification to the purchaser prior to shipment. In the event the purchaser should require substantially manufactured lots to be identical to those covered by this quotation, the seller will, upon written request, provide a quotation upon a change control program. No other warranty expressed or implied is offered by the seller other than the foregoing.

1.8.2 CLAIMS FOR DAMAGE IN SHIPMENT

The purchaser should inspect and functionally test the product(s) in accordance with the instruction manual as soon as it is received. If the product is damaged in any way, including immediately with the carrier, or if insured separately, with the purchaser's insurance company.

1.8.3 SHIPPING

On products to be returned under warranty, await receipt of shipping instructions then forward the instrument prepaid to the destination indicated. The original shipping containers with their appropriate blocking and isolating material is the preferred method of packing. Any other suitably strong container may be used provided the product is wrapped in a sealed plastic bag and surrounded with at least four inches of shock absorbing material to cushion firmly, preventing movement inside the container.

CHAPTER 2
INSTALLATION

2.1 GENERAL

This section describes the installation of the Model 5300 Resolver/Synchro Standard (RSS).

2.2 UNPACKING AND INSPECTION

The RSS has been thoroughly tested, inspected and evaluated at the factory. Care has been taken in the design of the wrapping and packaging material to insure that no damage results from mishandling. To unpack the RSS, perform the following:

1. Remove RSS from the shipping container. Save container for future use in storing or shipping.

2. Visually check contents of the shipping container against the packing list.

3. Check for damage to RSS and notify the carrier if damage is discovered.

2.3 MECHANICAL

The RSS is designed for bench use or rack mounting. An outline and dimension drawing is shown in figure 2-1.

2.4 LINE VOLTAGE SELECTION

The RSS operates from either 115 Vrms (10%, 2 A slo-blo) or 230 Vrms (10%, 1 A slo-blo fuse), 47 Hz to 440 Hz. Each RSS is set for 115 VAC operation at the factory.

The rotary voltage selection switch is located inside the rear panel power entry module. To select the desired voltage switch position, perform the following:

WARNING

DO NOT PLUG LINE CORD INTO AC RECEPTACLE AT THIS TIME. CONNECTION TO THE WRONG VOLTAGE SOURCE WILL CAUSE DAMAGE TO THE RSS AND MAY CAUSE INJURY OR DEATH OF THE OPERATOR.

1. Place on/off switch to off (O) position.

2. Disconnect line cord from RSS.

3. Using a flat screwdriver blade, pry open the fuse guard cover on power entry module .

4. Rotate the selection switch until the desired voltage indicator appears.

5. Replace existing fuse with appropriate size fuse (115V = 2 A slo lo; 230V = 1 A slo-blo).

6 . Close fuse guard cover.

2.5 FRONT PANEL TERMINALS

All front panel terminals accept double prong banana type plugs or stripped wire. Table 2-1 shows the signals available via the front panel terminals.

2.6 REAR PANEL TERMINALS

The rear panel contains connector J23 (and J22, optional) and a terminal block. J23 is used to connect to an IEEE-488 controller, and J22 (when present) allows access to the analog signals and digital angle output. The terminal block allows access to the analog signals.

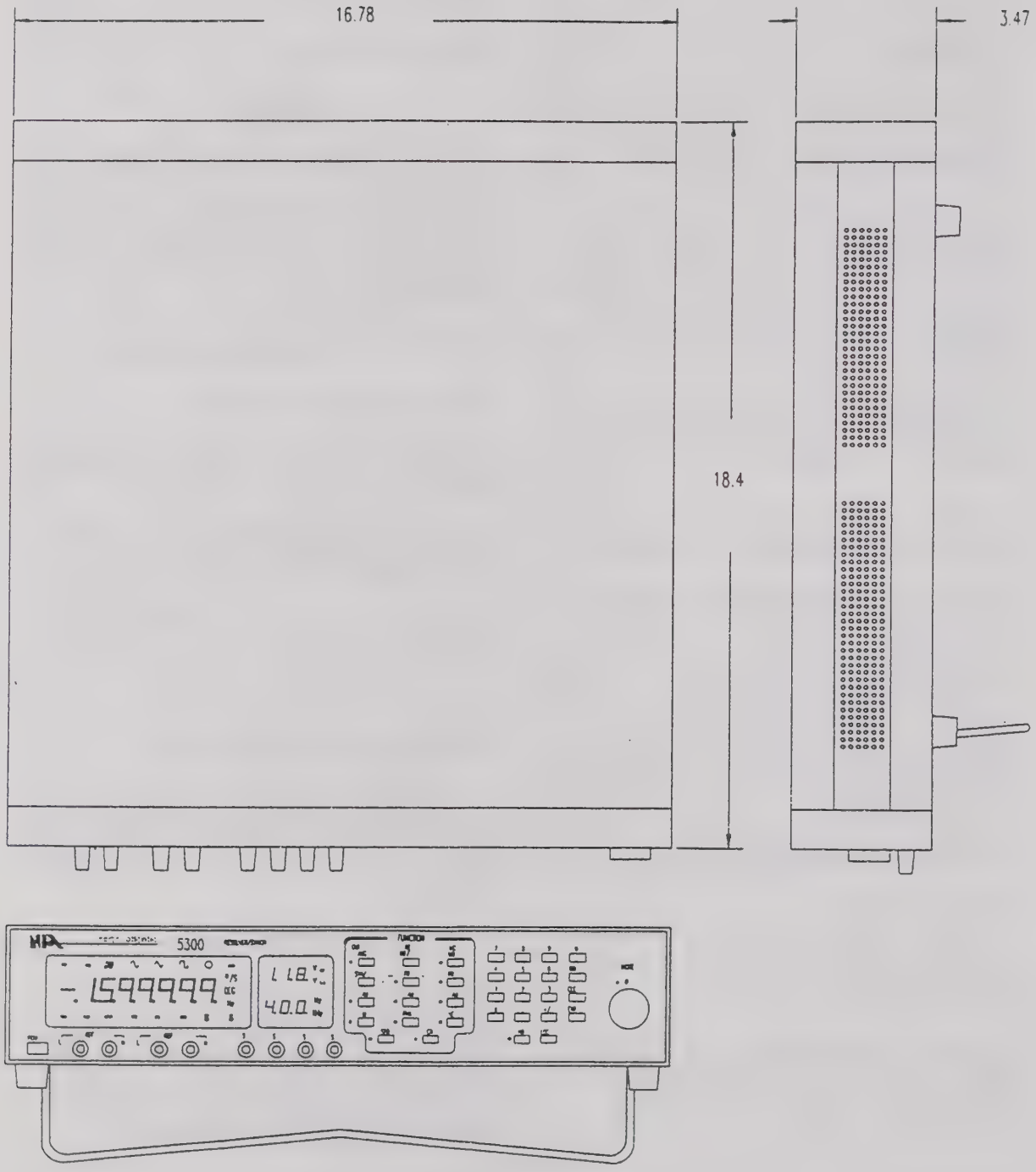

Figure 2-1. RSS Outline and Dimension Drawing

Table 2-1. Front Panel Terminals

SIGNAL	FUNCTION
S1	Synchro/Resolver S1
S2	Synchro/Resolver S2
S3	Synchro/Resolver S3
S4	Resolver S4
REF INPUT - HI	External Reference input +
REF INPUT - LO	External Reference input -
REF OUTPUT - HI	Internal Reference output +
REF OUTPUT - LO	Internal Reference ground

Table 2-2 Terminal Block Connections

SIGNAL	FUNCTION
S1	Synchro/Resolver S1
S2	Synchro/Resolver S2
S3	Synchro/Resolver S3
S4	Resolver S4
SENSE1	Remote sense for S1
SENSE2	Remote sense for S2
SENSE3	Remote sense for S3
SENSE4	Remote sense for S4
REF IN+	External Reference input +
REF IN -	External Reference input -
REF	Internal Reference output
REF GND	Internal Reference ground
AGND	Analog Ground
CHASSIS	Chassis Ground

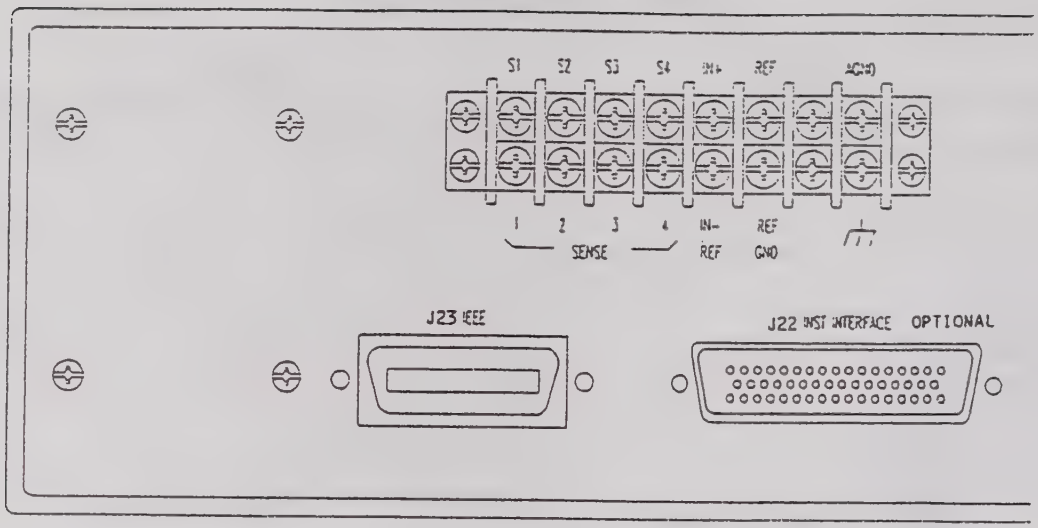

Figure 2-2. RSS Rear Panel Terminals

2.6.1 **TERMINAL BLOCK**

A terminal block is provided to allow access from the rear panel to the analog signals (see figure 2-2). Refer to table 2-2 for a description of the signals on the terminal block.

2.6.2 **J23 IEEE-488 CABLE INSTALLATION**

The IEEE-488 interface connector, J23 is used to control the RSS from an external IEEE-488 controller. Table 2-3 lists the pin designations. To attach this connector perform the following:

1. Place power on/off switch to the off (O) position.

2. Insert 24-pin IEEE-488 interface connector into J23 rear panel connector.

3. Tighten IEEE-488 interface connector screws using a small screwdriver.

4. Connect opposite end of I/O connector to host or computer.

2.6.3 **J22 INST. INTERFACE CABLE INSTALLATION (OPTIONAL)**

The RSS interface cable allows access from the rear panel to the analog signals and digital angle outputs. Table 2-4 lists the pin designations.

1. Place power on/off switch to the off (O) position.

2. Insert 50-pin I/O connector into J22 rear panel connector.

3. Tighten I/O connector screws using a small screwdriver.

4. Connect opposite end of I/O connector as required.

2.7 **GROUNDING**

In a high accuracy RSS, it is necessary for chassis and signal (AGND) ground to be tied together. The RSS is shipped from the factory with a shorting link, on the rear panel terminal

block, making this connection.

Note

Ground loops should be avoided in system applications.

2.8 INSTALLATION

The RSS is designed for either bench or equipment rack mounting. To install the RSS, select one of the following options and perform the procedure:

2.8.1 BENCH INSTALLATION

To install the RSS on a bench, perform the following:

1. Select an appropriate area that permits access to front and rear panels of RSS. Check that air flow into RSS rear panel fan is not restricted.

2. Place RSS on bench and attach interface cables (paragraph 2.6)

3. Turn front panel on/off switch on (I) and check that RSS powers up.

4. Refer to Chapter 5, Maintenance, Section II, and run performance test.

2.8.2 RACK MOUNT INSTALLATION

The RSS is shipped with two rack attachment handles to facilitate attaching the RSS to an equipment rack. To attach the handles, perform the following.

1. Remove handles and attaching hardware from shipping container.

2. Attach a handle to each side of RSS using hardware supplied.

Note

The rack mounting method used is the responsibility of the user (slides, tray, etc.).

3. Place RSS in rack and attach to rack through mounting handles.

4. Attach interface cables (paragraph 2.6).

5. Turn front panel on/off switch on (I) and check that RSS powers up.

6. Refer to Chapter 5, Maintenance, Section II, and run performance test.

Table 2-3. J23 IEEE-488 Interface Connector Pin Assignments

PIN	SIGNAL	PIN	SIGNAL
1	DIO1	13	DIO5
2	DIO2	14	DIO6
3	DIO3	15	DIO7
4	DIO4	16	DIO8
5	EOI	17	REN
6	DAV	18	GND (6)
7	NRFD	19	GND (7)
8	NDAC	20	GND (8)
9	IFC	21	GND (9)
10	SRQ	22	GND (10)
11	ATN	23	GND (11)
12	SHIELD	24	GND LOGIC

Table 2-4. J22 Pin Designations

PIN	SIGNAL	PIN	SIGNAL
1	S1	13	BIT 12 *
2	S3	14	BIT 13 *
3	S3 Sense	15	BIT 18 *
4	RL Out	16	BIT 19 *
5	S1 Sense	17	DGND
6	RH In	18	S1, S3 GND
7	RH In	19	S2, S4 GND
8	RL In	20	CASE
9		21	
10	BIT 1 *	22	
11	BIT 6 *	23	
12	BIT 7 *	24	SYNC 2 *

Table 2-4. J22 Pin Designations

PIN	SIGNAL	PIN	SIGNAL
25	SYNC 1 *	38	S2 SENSE
26		39	
27	BIT 2 *	40	
28	BIT 5 *	41	
29	BIT 8 *	42	
30	BIT 11 *	43	BIT 3 *
31	BIT 14 *	44	BIT 4 *
32	BIT 17 *	45	BIT 9 *
33	BIT 20 *	46	BIT 10 *
34	S2	47	BIT 15 *
35	S4	48	BIT 16 *
36	S4 SENSE	49	BIT 21 *
37	RH OUT	50	BIT 22 *

* NOTE: These signals are optional.

CHAPTER 3
OPERATION

SUPPLEMENTAL INFORMATION

IMPORTANT

INTERNAL MODE. After changing the internal frequency or L-L voltage (below 200 Hz) via the front panel or computer interface, wait approximately 8 seconds before initiating a calibration.

EXTERNAL MODE. After applying (or changing) an external reference signal to the REF INPUT terminals, or changing the L-L voltage below 200 Hz, wait approximately 8 seconds before initiating a calibration or measurement.

IF THIS DELAY IS NOT OBSERVED, AN ERROR MAY OCCUR.

SETTING L-L VOLTAGE AFTER AN OVERLOAD. If an overload occurs (OVLD and 0.0 V_{L-L} displayed), wait approximately 5 seconds before resetting the L-L voltage.

CHAPTER 3
OPERATION

Section I. Controls and Indicators

3.1 INTRODUCTION

This section contains general operating procedures, descriptions of controls and indicators and practical applications for the Model 5300 Resolver/Synchro Standard (RSS).

3.2 NUMERIC DISPLAYS

The RSS has three numeric displays which indicate the reference frequency, output Line-to-Line amplitude or reference amplitude, and the current shaft angle. Refer to figure 3-1 for the location of each display.

3.2.1 MAIN DISPLAY

The main display normally indicates the current shaft angle being generated. This display is also used during data entry for the following keys:

- Increment
- Phase
- Modulation Frequency
- Modulation Amplitude
- Modulation Velocity

Normally after entering data the main display will switch back to displaying the current shaft angle. If HOLD mode is active, then the main display will remain in data entry mode.

3.2.2 AMPLITUDE DISPLAY

The Amplitude display can display one of the following:

- Output Line-to-Line Amplitude
- External Reference Amplitude
- Internal Reference Amplitude

The value displayed depends on whether the RSS is in Internal or External Reference mode and whether Reference Amplitude or Output Amplitude key was selected last.

Data entry for the above is also accomplished on the Amplitude display.

3-2.3 FREQUENCY DISPLAY

The Frequency display shows the frequency of the Internal or External reference signal. When the RSS is in External Reference mode the incoming reference signal's frequency is measured and displayed. In Internal Reference mode this display indicates the internal oscillator's programmed frequency.

3.3 INDICATORS

Indicators are located near the main display, amplitude display, frequency display and the keyboard to indicate a mode, unit or warning. Refer to figure 3-1 for the location of each indicator.

3-3.1 *SYN* INDICATOR

Figure 3-1
Front Panel Displays and Indicators

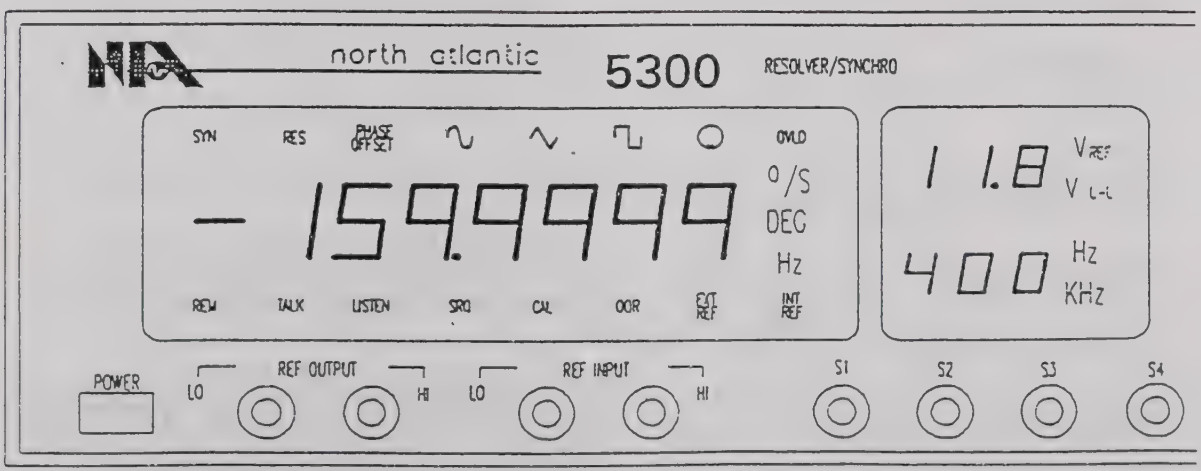

When lit, the RSS is generating 3 wire Synchro signals. S1, S2 and S3 are active. S4 is not active.

3.3.2 *RES* INDICATOR
When lit, the RSS is generating *4* wire Resolver signals. S1, S2, S3 and S4 are active.

3.3.3 *PHASE OFFSET* INDICATOR
When lit, the Synchro or Resolver output signals have a programmed phase offset from the internally generated reference signal.

3.3.4 *SINE WAVE* INDICATOR
When lit, the RSS is performing Sine Wave modulation.

3-3.5 *TRIANGLE WAVE* INDICATOR
When lit, the RSS is performing Triangle Wave modulation.

3.3.6 *SQUARE WAVE* INDICATOR
When lit, the RSS is performing Square Wave modulation.

3.3.7 *ROTATION* INDICATOR
When lit, the output shaft angle is rotating in a CW or CCW direction.

3.3.8 *OVERLOAD* INDICATOR
When flashing, either the reference or signal amplifiers are overloaded. When an overload is detected the amplifier outputs are disconnected and the output level is fumed down to its minimum value. To reset this condition, program a new output amplitude.

3.3.9 °/S INDICATOR
When lit, the value in the main display is modulation velocity in degrees per second.

3.3.10 *DEG* DEDICATOR
When lit, the value in the main display is the output shaft angle or phase offset in degrees.

3.3.11 *Hz* INDICATOR
When lit, the value in the main display is the modulation frequency in Hertz.

3.3.12 *INT REF* INDICATOR
When lit, the RSS is operating in Internal Reference mode.

3.3.13 *EXT REF* INDICATOR
When lit, the SRS is operating in the External Reference mode. In this mode an external reference signal must be applied to the REF INPUT terminals.

3.3.14 *OOR* INDICATOR
When lit, the RSS is operating outside of the published limits. When the OOR indicator is on, accuracy is not guaranteed.

3.3.15 *CAL* INDICATOR
This indicator lights when a Calibration is in progress.

3.3.16 *SRQ* INDICATOR
When lit, the RSS is requesting service over the IEEE *488* interface bus.

3.3.17 *LISTEN* INDICATOR
When lit, the RSS is addressed to listen over the EKE *488* interface bus.

3.3.18 *TALK* INDICATOR
When lit, the RSS is addressed to tale over the IEEE *488* interface bus.

3.3.19 *REM* INDICATOR
When lit, the RSS is in remote mode. To exit remote mode hit the LOCAL pushbutton.

3.3.20 *VREF* INDICATOR When lit, the Voltage display is showing either the Reference amplitude in volts.

3.3.21 *V L-L* INDICATOR
When lit, the Voltage display is showing the Output Line-to-Line voltage.

3.3.22 *Hz* INDICATOR
When lit, the Frequency display is indicating the Reference frequency in Hertz.

3.3.23 *KHz* INDICATOR
When lit, the Frequency display is indicating the Reference frequency in kilohertz.

3.4 KEYBOARD CONTROLS

The Keyboard controls consist of three functional groups; OUTPUT, REFERENCE and MODULATION, and a numeric keypad and other miscellaneous controls.

3.4.1 OUTPUT CONTROLS

The Output group controls the major parameters of the shaft angle generation. These controls allow the operator to set the shaft angle, select Synchro or Resolver, set the

output Line-to-Line Voltage and enter Increment values. Refer to figure *3-2* for the location of each control.

3.4.1.1 *ANGLE* Switch. When the ANGLE button is pressed, the unit enters angle input mode. This mode is indicated by the LED adjacent to the ANGLE button being on.

When the ANGLE button is first hit, the last programmed angle appears in the main display. A new angle may now be entered. To enter the new angle, use the numeric keypad and follow the angle with the ENTER key.

The new angle is applied to the unit when the ENTER key or any other function key is hit. If HOLD mode is off, The ANGLE LED will go off and the new output angle will appear in the main display. To change the angle again press the ANGLE key and repeat the process again. If HOLD mode is on, it is not necessary to hit the ANGLE key for each angle charge.

The output angle can also be changed with the Increment knob when the ANGLE switch led is on. Turning the Increment knob clockwise will add the programmed increment angle to the current angle for each detent. Turning the Increment knob counterclockwise will subtract the programmed from the current angle for each detent.

The UP and DOWN keys function the same as the Increment Knob. Pressing the UP Key adds the programmed increment angle to the current angle. Pressing the DOWN key subtracts the programmed increment angle from the current angle.

The output angle entry range is ± 360.0000°.

3.4.1.2 ***SYN/RES* Switch.** This key alternately selects a 3 wire Synchro output or a four wire Resolver output.

3.4.1.3 ***AMPL* Switch**. The AMPL switch is used to change the output Line-to-Line voltage.

When the AMPL button is pressed, the unit enters output amplitude input mode. This mode is indicated by the LED adjacent to the AMPL button being on.

When the AMPL button is first hit, the last programmed Line-to-Line voltage appears in the Voltage display. A new Line-to-Line voltage may now be entered. To enter the new Line-to-Line voltage, use the numeric keypad and follow the voltage with the ENTER key.

The new Line-to-Line voltage is set when the ENTER key is hit. If HOLD mode is off, The Output AMPL LED will go off and the new Output Line-to-Line voltage will appear in the voltage display. To change the Line-to-Line voltage again press the AMPL key and repeat the process again. If HOLD mode is on, it is not necessary to hit the AMPL key for each Line-to-line change.

The allowable range of the output Line-to-Line is 0 or 1 to 90V. At power-up the Line-to-Line defaults to 0V.

3.4.1.4 *INCR* Switch. The INCR switch is used to change the Increment variable. The increment variable is added or subtracted when the INCREMENT Knob is turned or when the UP and DOWN keys are hit. The Increment function works in the following data entry modes:

- ANGLE
- Modulation Velocity
- Modulation Frequency

Each mode has its own Increment variable. To use, press the INCR key followed by the mode (ANGLE, MOD VEL, MOD FREQ) and then the desired Increment value followed by the ENTER key. The Increment is set when the ENTER key is pressed.

When the INCR and a mode key are hit, the last programmed increment is shown on the main display. The unit is now in Increment entry mode. This mode is

Figure 3-2
Front Panel Controls

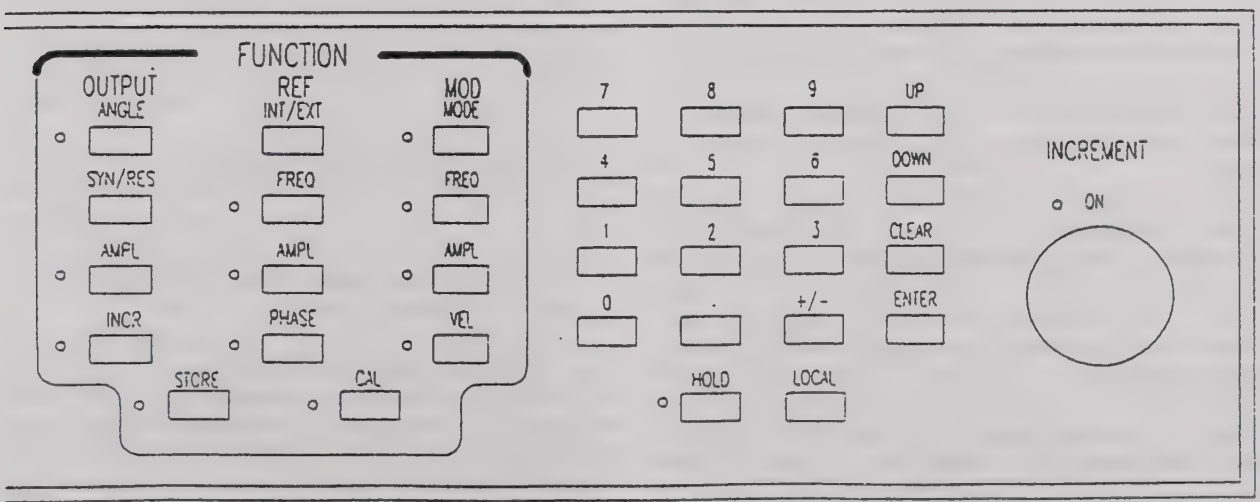

indicated by the LED adjacent to the INCR button being on.

3.4.2 REFERENCE CONTROLS

The REF group controls the Reference mode and the operating characteristics of the internal reference source.

3.4.2.1 ***INT/EXT* Switch.** This key alternately selects the signal applied to the REF INPUT terminals or the Internally generated reference as input to the simulator.

When the unit is in EXT mode the EXT REF indicator will illuminate and the REF OUTPUT terminal are disconnected.

In INT mode the INT REF indicator will light and the internal reference signal will appear at the REF OUTPUT terminals.

3.4.2.2 **FREQ Switch.** The FREQ switch is used to change the frequency of the internally generated reference signal. This switch only works when the instrument is in Internal reference mode.

When the FREQ button is pressed, the unit enters reference frequency input mode. This mode is indicated by the LED adjacent to the REF FREQ button being on.

When the FREQ button is first hit, the last programmed frequency appears in the Frequency display. A new frequency may now be entered. To enter the new frequency use the numeric keypad and follow the frequency with the ENTER key.

The new frequency is set when the ENTER key is hit. If HOLD mode is off, The REF FREQ LED will go off and the new frequency will appear in the frequency display. To change the frequency again, press the FREQ key and repeat the process again. If HOLD mode is on, it is not necessary to hit the FREQ key for each frequency change.

The allowable range of the internal reference frequency is 47 to 20,000 Hz. At power-up the frequency defaults to 400 Hz.

3.4.2.3 ***AMPL* Switch.** The AMPL switch performs two functions depending on the current reference mode.

If the current reference mode is EXT, hitting this key displays the External reference voltage measurement in the voltage display.

When the reference mode is INT, the AMPL switch is used to change the output voltage of the internal reference.

When the AMPL button is pressed and the unit is in INT REF mode, the unit enters reference amplitude input mode. This mode is indicated by the LED adjacent to the REF AMPL button being on.

When the AMPL button is first hit and the unit is in INT REF mode, the last programmed reference voltage appears in the Voltage display. A new reference voltage may now be entered. To enter the new reference voltage, use the numeric keypad and follow the voltage with the ENTER key.

The new reference voltage is set when the ENTER key is hit. If HOLD mode is off, The REF AMPL LED will go off and the new reference voltage will appear in the voltage display. To change the reference voltage again, press the AMPL key and repeat the process again. If HOLD mode is on, it is not necessary to hit the AMPL key for each reference voltage change.

The allowable range of the reference voltage is 0 or 2 to 1 to V. At power-up the reference voltage defaults to 0V.

3.4.2.4 ***PIIASE* Switch.** The PHASE switch is used to change the phase shift between the internally generated reference signal and the Synchro or Resolver output signals. This key is active only when the unit is in INT REF mode.

When the PHASE button is pressed, the unit enters reference phase input mode. This mode is indicated by the LED adjacent to the PHASE button being on.

When the PHASE button is first hit, the last programmed Phase shift voltage appears in the main display. A new Phase shift may now be entered. To enter the new Phase shift, use the numeric keypad and follow the phase with the ENTER key.

The new Phase shift is set when the ENTER key is hit. If HOLD mode is off, The REF PHASE LED will go off and the new Phase shift voltage will appear in the main display. To change the Phase shift again press the PHASE key and repeat the process again. If HOLD mode is on, it is not necessary to hit the PHASE key for each Phase shift change.

The allowable range of the output Phase shift is +180°. At power-up the Phase shift defaults to 0.0000°.

NOTE

When the reference mode is changed to EXT REF mode, the phase shift is set back to 0.0000°.

3.4.3 MODULATION CONTROLS

The MOD group selects the modulation mode and the modulation parameters. Four modulation modes are provided; Sine Wave, Triangle Wave, Square Wave and Continuos Rotation.

3.4.3.1 ***MODE* Switch**. This key allows the selection of the desired modulation mode. The first time the MODE key is pressed the SINE indicator light up. Repeatedly

pressing the MODE key cycles the modulation indicators in the following sequence:

SINE - TRIANGLE - SQUARE - ROTATION - OFF

To start the desired mode press ENTER when the desired mode indicator is illuminated. If ENTER is not pressed within 5 seconds the modulation mode is canceled and the unit will return to static operation.

3.4.3.2 ***FREQ*** **Switch.** The FREQ switch is used to change the frequency of the modulation.

When the FREQ button is pressed, the unit enters modulation frequency input mode. This mode is indicated by the LED adjacent to the MOD FREQ button being on.

When the FREQ button is first hit, the last programmed modulation frequency appears in the main display. A new frequency may now be entered. To enter the new frequency use the numeric keypad and follow the frequency with the ENTER key.

The new frequency is set when the ENTER key is hit. If HOLD mode is off, The MOD FREQ LED will go off and the new frequency will appear in the main display. To change the frequency again press the FREQ key and repeat the process again. If HOLD mode is on, it is not necessary to hit the FREQ key for each frequency change.

The allowable range of the modulation frequency is 0 to 1,000 Hz. At power-up the frequency defaults to 0 Hz.

The modulation frequency can also be changed with the Increment Knob or the UP and DOWN keys.

3.4.3.3 ***AMPL*** **Switch.** The AMPL switch is used to change the peak modulation amplitude in degrees.

When the AMPL button is pressed, the unit enters modulation amplitude input mode. This mode is indicated by the LED adjacent to the MOD AMPL button being on.

When the AMPL button is first hit, the last programmed modulation amplitude appears in the main display. A new modulation amplitude may now be entered. To enter the new modulation amplitude, use the numeric keypad and follow the amplitude with the ENTER key.

The new modulation amplitude is set when the ENTER key is hit. If HOLD mode is off, The MOD AMPL LED will go off and the modulation amplitude will appear in the main display. To change the modulation amplitude again press the AMPL key and repeat the process again. If HOLD mode is on, it is not necessary to hit the AMPL key for each modulation amplitude change.

The allowable range of the modulation amplitude is 0 to 180 degrees. At power-up the modulation defaults to 0°.

3.4.3.4 ***VEL*** **Switch.** The VEL switch is used to change the peak modulation Velocity in degrees/sec.

When the VEL button is pressed, the unit enters modulation Velocity input mode. This mode is indicated by the LED adjacent to the MOD VEL button being on.

When the VEL button is first hit, the last programmed modulation Velocity appears in the main display. A new modulation Velocity may now be entered. To enter the new modulation Velocity, use the numeric keypad and follow the Velocity with the ENTER key.

The new modulation Velocity is set when the ENTER key is hit. If HOLD mode is off, The MOD VEL LED will go off and the modulation Velocity will appear in the main display. To change the modulation Velocity again press the VEL key and repeat the process again. If HOLD mode is on, it is not necessary to hit the VEL key for each modulation Velocity change.

The allowable range of the modulation Velocity is 0 to 100,000 degrees/second. At power-up the modulation defaults to 0 °/sec.

3.4.4 MISCELLANEOUS CONTROLS

3.4.4.1 ***CAL*** **Switch.** This key initiates a self calibration allowing the unit to achieve it's full accuracy. A calibration should be performed anytime the frequency or the output Line-to-Line voltage changes by more than 5 %.

Calibration can be performed in either Internal or External Reference mode, however when in External Mode a reference signal must be connected to the REP INPUT terminals before calibration is started

NOTE

Calibration is not permitted if an overload condition exists (OVLD and 0.0 VL-L displayed) or L-L voltage is set to zero.

When the CAL key is pressed, the CAL indicators illuminates indicating a Calibration is in progress. During Calibration the signal outputs (S1, S2, S3, and S4) are isolated. Calibration requires approximately 12 seconds to complete. When completed the CAL indicator goes off.

3.4.4.2 ***STORE*** **Switch**. This switch does not function.

3.4.4.3 ***HOLD*** **Switch**. The HOLD switch alternately turns on and off Hold mode. Hold mode is active when the HOLD LED is turned on. When the unit is not in Hold mode, the main display reverts back to displaying the current shaft angle after any data entry. When Hold mode is active, instead of the main display switching back to the shaft angle, the unit remains in data entry mode. This allows the data to changed again without having to hit the appropriate function switch.

3.4.4.4 *LOCAL* **Switch**. This key requests a return from IEEE 488 control to local control. If local lockout was set by the IEEE 488 controller third request will be ignored.

The REM indicator shows if the request was accepted.

3.4.4.5 *UP* **Switch.** This key adds a stored increment value to the displayed parameter. This key is active only in the following modes.

- Angle
- Modulation Velocity
- Modulation Frequency

3.4.4.5 *DOWN* **Switch.** This key subtracts a stored increment value to the displayed parameter. This key is active only in the following modes.

- Angle
- Modulation Velocity
- Modulation Frequency

3.4.4.5 *INCREMENT* **Knob.** This control performs the same function as the UP and DOWN keys. Turning the knob clockwise increments the parameter and turning the knob counter clockwise decrements the parameter by the stored increment value. The INCREMENT knob is active only in the following modes.

- Angle
- Modulation Velocity
- Modulation Frequency

3.4.4.6 *ENTER* **Switch.** This key causes keyboard numeric data to be applied to the unit.

3.4.4.7 *CLEAR* **Switch**. This key clears any numeric enter prior to hitting the ENTER key.

3.4.4.8 **+ /- Switch.** This key changes the sign of the data currently being entered.

3.4.4.6 ***0- 9* and . Switch.** These keys are used to enter numeric data.

3.5 SETTING UP THE REFERENCE

Before the RSS can be used the reference source must be specified. If an external reference source is to be used, connect it to the REF INPUT terminals and press

REF [INT/EXT]

one or two times until the EXT REF indicator illuminates.

If the Internal reference oscillator is to be used, three items must be programmed. First Internal reference mode must be selected. Then the frequency and output voltage must be set. Set the mode to internal reference by pressing

REF [INT/EXT]

one or two times until the *INT* REF indicator illuminates.

Next set the oscillators frequency. For example, to set the frequency to 1000 Hz. press the following keys:

REF [INT/EXT]
[1]
[0]
[0]
[0]
[ENTER]

Finally, set the reference oscillator's output voltage. For example, for 115V output, press the following keys:

REF [AMPL]
[1]
[1]
[5]
[ENTER]

3.6 PHASE SHINING THE OUTPUT SIGNALS

The Model RSS's phase shifting capability provides for a more accurate simulation of a real Synchro or Resolver. The output signals may be phase shifted ±180 degrees with respect to the reference. The phase shift is independent of the programmed frequency of output voltage level.

Phase shifting works only when the unit is set to Internal Reference mode.

Example: Simulate a phase lag of 7.5 degrees. Press:

REF [PHASE]
[–]
[7]
[.]
[5]

ENTER

3.7 **SETTING THE LINE-TO-LINE** VOLTAGE The Line-to-Line voltage setting determines the maximum RMS voltage that will appear across the outputs. To set the output Line-to-Line voltage to 11.8 volts, press:

OUTPUT AMPL

1

1

.

8

ENTER

3.8 **SETTING THE OUTPUT ANGLE** The static output shaft angle can be changed 3 different ways. Method 1 is the direct entry of the angle on the keypad. For example, set the simulator to 135.0001 degrees. Press:

OUTPUT ANGLE

1

3

5

.

0

0

0

1

ENTER

If HOLD mode is active, the ANGLE key does not have to be hit when changing the angle again.

The second method of changing the angle involves the use of the UP and DOWN keys. This method saves a lot of keystrokes if the desired angles are a fixed increment apart.

For example: If we wish to simulate the angles 0, 45, 90, 135 etc. Fist program an angle increment of 45 degrees by pressing:

OUTPUT INCR

OUTPUT ANGLE

4

5

ENTER

Next set the static angle to 0.0000 degrees.

OUTPUT ANGLE

0

ENTER

The simulator is now set to 0.0000 degrees.

OUTPUT ANGLE

UP

The simulator is now set to 45.0000 degrees.

UP

The simulator is now set to 90.0000 degrees.

UP

The simulator is now set to 135.0000 degrees.

DOWN

The simulator is now set to 90.0000 degrees.

The third method is similar, first program the desired increment as above and hit the

ANGLE

key. Now rotate the increment knob. Each clockwise detent increases the angle by the increment and each counterclockwise detent decrements the angle by the programmed increment.

3.9 SINE WAVE MODULATION

When sine wave modulation is active, the output angle is sinusoidal modulated about the current static angle.

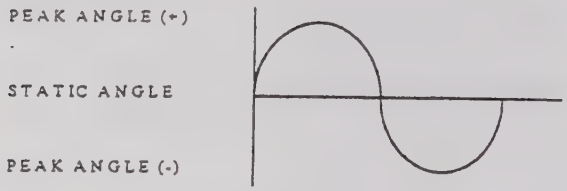

Figure 3-3. Sine Wave Modulation

The modulation characteristics are set using any two of the following parameters:

- Modulation Frequency
- Modulation Velocity
- Modulation Amplitude

These parameters can be modified dynamically while the unit is modulating. Modulation Velocity specifies the peak velocity and Modulation Amplitude specifies the peak deviation from the current angle.

The last two parameters entered determine the output waveform. These three parameters are related by the following formula:

$$A = \frac{V}{2*\pi*F}$$

where A is the peak amplitude in degrees
V is the peak velocity in degrees/sec
F is the modulation frequency in Hz

Example: Program sine modulation at 15 Hz, 90° peak centered about 30°.

First set the static angle to 30 degrees

OUTPUT [ANGLE]

[0]

[0]

[ENTER]

Set the modulation frequency

MOD [FREQ]

[5]

[ENTER]

Set the modulation amplitude

MOD [AMPL]

[2]

[0]

[ENTER]

Finally, turn on sine modulation mode. Hit

MOD [MODE]

until the SINE indicator lights, then

[ENTER]

within 5 seconds to start sine modulation.

To turn sine wave mode off, hit

MOD [MODE]

until all modulation indicators are off, then

[ENTER]

3.10 TRIANGLE MODULATION

In triangle mode the output angle traverses back and forth between two angles at a constant velocity. The starting angle is the static angle, the angle then increases linearly to the static angle + the modulation amplitude, to the static angle - the modulation amplitude and back to the static angle.

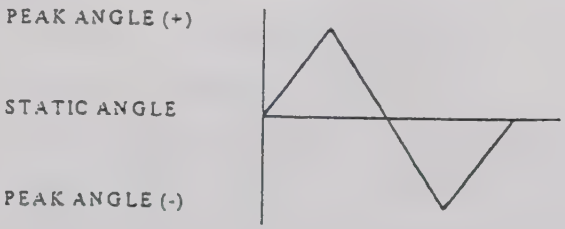

Figure 3-4. Triangle Wave Modulation

The modulation characteristics are set using any two of the following parameters:

- Modulation Frequency
- Modulation Velocity
- Modulation Amplitude

These parameters can be modified dynamically while the unit is modulating. Modulation Velocity specifies the peak velocity and Modulation Amplitude specifies the peak deviation from the current static angle.

The last two parameters entered determine the output waveform. These three parameters are related by the following formula:

$$A = \frac{V}{F}$$

where A is the peak amplitude in degrees
V is the peak velocity in degrees/sec
F is the modulation frequency in Hz

Example: Program triangle modulation at 100 °/sec, 10° peak centered about 90°.

First set the static angle to 90 degrees

OUTPUT [ANGLE]

[9]

[0]

[ENTER]

Set the modulation velocity

MOD [VEL]

[1]

[0]

[0]

[ENTER]

Set the modulation amplitude

MOD [AMPL]

[1]

[0]

[ENTER]

Finally, turn on triangle modulation mode. Hit

MOD [MODE]

until the TRIANGLE indicator lights, then

[ENTER]

within 5 seconds to start triangle modulation.

To turn triangle wave mode off, hit

MOD [MODE]

until all modulation indicators are off, then

[ENTER]

3.11 SQUARE WAVE MODULATION

In square wave mode the output angle switches back and forth between the static angle and the static angle + peak angle.

The modulation characteristics are set by specifying the following parameters:

- Modulation Frequency
- Modulation Amplitude

These parameters can be modified dynamically while the unit is modulating. Modulation Velocity specifies the peak velocity and Modulation Amplitude specifies the peak

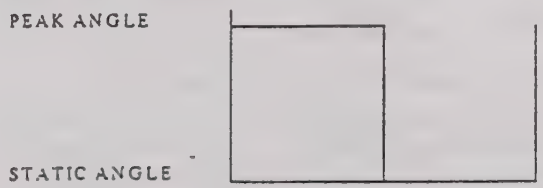

deviation from the current static angle.

Figure 3-5. Square Wave Modulation

Example: Set the unit to square wave modulation mode, switch between 0°and 180° at a 1 Hz rate.

First set the static angle to 0.0000 degrees

OUTPUT [ANGLE]

0

ENTER

Set the modulation frequency

MOD FREQ

1

ENTER

Set the modulation amplitude

MOD AMPL

1

8

0

ENTER

Finally, turn on square wave modulation mode. Hit

MOD MODE

until the SQUARE indicator lights, then

ENTER

within 5 seconds to start square wave modulation.

To turn square wave mode off, hit

MOD MODE

until all modulation indicators are off, then

ENTER

3-12 CONTINUOUS ROTATION

In Rotation mode the output angle advances Clockwise or Counter Clockwise at a constant velocity. If the velocity is specifies as positive, Counter Clockwise rotation occurs. Negative velocities cause a clockwise rotation.

Example: Program the unit to run at 1000 °/sec in a counter clockwise direction.

First set the modulation velocity

MOD VEL

1

0

0

0

ENTER

Finally, turn on rotation mode. Hit

MOD MODE

until the ROTATION indicator lights, then

ENTER

within 5 seconds to start rotation.

To turn rotation off, hit

MOD MODE

until all modulation indicators are off, then

ENTER

CHAPTER 3
OPERATION

Section II. CASS Programming Mode

3.13 GENERAL

This section describes the remote operation of the Model 5300 Resolver/Synchro Standard (RSS) using the ANSI/IEEE-STD 488.1-1987, Standard Digital Interface for Programmable Instrumentation. The Standard programming language (SPL) is described.

3.13.1 INTERFACE FUNCTIONS SUPPORTED

The RSS is a listen only device for the Standard Programming Language. The interface functions and subsets that the RSS responds to are listed in Table 3-1.

Table 3-1. IEEE-488 Interface Functions and Descriptions

Interface Function	Subset	Function
Source Handshake	SH0	No Capability
Acceptor Handshake		Complete Capability
Talker	T0	No Capability
Extended Talker	TE0	No Capability
Listener	L4	Basic Listener
		Unaddress if MLA
Extended Listener	LE0	No Capability
Service Request	SR0	No Capability
Remote Local	RL1	Complete Capability
Parallel Poll	PP0	No Capability
Device Clear	DC0	No Capability
Device Trigger	DT0	No Capability
Controller	C0	No Capability

3.13.2 SETTING IEEE 488.BUS ADDRESS

The device address that the RSS will respond to is set by the following sequence of front panel keystrokes:

With the unit in local mode, press

[LOCAL]

The main display shows

IEEE 6

This indicates that the current IEEE address is set to address 6. To change this to another address, press the UP key to increment the address, or press the DOWN key to decrement the address. For example, to set IEEE address 10, press the following keys:

[LOCAL]

[UP]

[UP]

[UP]

[UP]

[ENTER]

The IEEE address is stored in EEPROM when set. Once set to the desired address, it not necessary to set it each time the unit is powered up.

If a mistake is made when changing the IEEE address, press the

[CLEAR]

key to exit without modifying the address.

3-14 COMMAND FORMAT

Instrument functions are bus programmable through the use of "data strings" and/or "Command codes. Numeric data is sent in the following format:

"DDD.DDDD"

All numeric data must have a decimal point present (except for numeric data of zero. Any non-numeric data, except the decimal point and the asterisk (*), will be ignored in the data string.

Command codes are sent in the following format:

*A (Asterisk + single character)

All Command codes characters must follow an asterisk (*). The asterisk acts as a delimiter to separate commands from data. The asterisk must always be sent first. All illegal commands will be ignored.

Multiple commands may be sent in a message. All command strings should be terminated with an ASCII line feed and or the IEEE-488 EOI signal. All commands are case sensitive.

Table 3-2 lists the commands available in the RSS.

When the RSS is addressed to listen, the instrument will go into remote mode operation. Local control can again be selected by pressing the "LOCAL" button on the front panel, if local lockout has not been enabled. Local control can also be restored by cycling power to the unit.

3.14.1 ANGLE COMMAND

The Angle Command is used to direct all input data to the current shaft angle position value. The Angle command is:

***A**

After the *A command is received, any input data that follows, automatically updates the current angle.

Example:

***A**	
222.2222	Simulated Angel is 222.2222
111.1111	Angle changes to 111.111

3.14.2 FUNCTION COMMAND

The function command latches the present angle data. All subsequent data will NOT automatically update the angle value. The format of the function command is:

***B**

3.14.3 SYNCHRO COMMAND

This command sets the operating mode to 3 wire Synchro. The following string sets Synchro Mode.

***S**

3.14.4 RESOLVER COMMAND

This command sets the operating mode to 4 wire Resolver. The following string sets Resolver Mode.

***R**

3.14.5 INTERNAL REFERENCE COMMAND

This command allows the selection of the internal reference oscillator. Once received the oscillator is internally connected to the shaft position generation circuits. The oscillator output also appears on the REP OUT terminals.

To select the internal reference source, sent the following:

***N**

14.6 EXTERNAL REFERENCE COMMAND

This command selects an external reference source to be used in generating the shaft angle. The external source should be connected to the EXT REF terminals.

To select the external reference, send the following:

***E**

3.14.7 PHASE SHIFT 0° COMMAND

The Phase Shift 0° Command Turns off the Phase shifting circuits of the RSS. The command format is:

***F**

3.14.8 PHASE SHIFT COMMAND

The Phase Shift command enables the programmed reference to signal phase shift. To use the phase shifting capability, first set the desired phase shift and then enable it using the phase shift command. The phase shift command is:

***I**

For example: To set the phase shift to 20 degrees, send the following message:

***B**	latch current angle data
20.0000*p	set phase shift
***C**	latch phase shift value
***I**	Apply programmed phase shift
***A**	re-enable angle select function

3.14.9 STATIC ANGLE COMMAND

This command cancels any modulation modes currently executing and sets the RSS to static operation. The Static Angel command is:

***D**

3.14.10 DYNAMIC ANGLE COMMAND

The Dynamic Angle Command enables the programmed modulation mode. The format of this command is:

***T**

Example: Set the RSS to sine wave modulation:

***X*M**	set sine modulation
***T**	enable modulation

3.14.11 SIGNAL VOLTAGE COMMANDS

The Signal Voltage Commands program the output Line-to-Line Voltage. Three of these set the Output Voltage to commonly used voltages and the fourth allows the user to specify an alternate voltage.

Preset Voltages (11.8, 26, and 90 V RMS) can be set using the following 3 commands.

***1** sets 11.8 V

***2** sets 26 V

***9** sets 90 V

For other voltages a two-step process is required. First. store the signal voltage with the *o command and then apply it to the RSS with the *5 command.

Example: set the RSS for 6V Line-to-Line

6*o*5 set 6 volts and apply in one command.

3.14.12 **REFERENCE VOLTAGE COMMANDS**

These commands program the internal reference output voltage. Three of these set the voltage to commonly used voltages and the fourth allows the user to specify an alternate voltage.

Preset Voltages (26, 115 and 6.8 V RMS) can be set using the following 3 commands.

***L** sets 26 V

***H** sets 115 V

***l** (lower case L) sets 6.8 V

For other voltages a two step process is required. First, store the reference voltage with the *r command and then apply it to the RSS with the *h command.

Example: Set the internal oscillator for 20 V output.

20*r*h set 20 volts and apply in one command.

3.14.13 **REFERENCE FREQUENCY COMMANDS**

These commands program the internal reference frequency. Three of these set the RSS to commonly used frequencies and the fourth allows the user to specify an alternate frequency.

Preset Frequencies (400 Hz, 60 Hz, and 800 Hz) can be set using the following 3 commands.

***4** sets 400 Hz

***6** sets 60 Hz

***8** sets 800 Hz

For other voltages a two step process is required. First, store the reference frequency with the *f command and then apply it to the RSS with the *7 command.

Example: Set the internal oscillator for 100 Hz.

.1*f*7 set frequency and apply in one command.

Note: The frequency is specified in Khz. Also this command will change the output angle to .1 degrees if the *B command was not issued previously. An alternative is:

***B** latch current angle data

***.1*f*7** set frequency

***A** re-enable angle select function

3.14.14 **DYNAMIC MODE COMMANDS**

The dynamic mode commands are used to set the desired modulation mode. Once set modulation can be enabled by the *T command. The available modulation mode commands are:

***+** set CW Rotation mode

***–** set CCW Rotation mode

***X*M** set Sine modulation mode

***Y*M** set Triangle modulation mode

***Z*M** set Square wave modulation mode

In addition to setting the modulation mode, the modulation parameters must be set. These include modulation frequency, peak modulation rate and square wave amplitude.

***a** sets modulation frequency
***b** sets peak modulation rate, or square wave amplitude

Example: Program the RSS for 1000°/sec Clockwise rotation.

1*b load 1000°/sec rate
***C** latch rate data
***+** select clockwise rotation
***T** enable dynamic angle operation

Example: Set the RSS to 45° square wave operation.

45*b set square wave amplitude to 45°
***C** latch amplitude data
***Z*M** select square wave mode
***T** enable dynamic angle operation

3.14.15 **PRESET COMMAND**

The Preset command puts the RSS into a predefined state. The format of the preset command is:

***P**

This command is equivalent to:

***A*R*N*F*D*2*L*4*M*X**

Upon receipt the RSS will be in the following state:

- Angle entry mode
- Resolver mode
- Internal Reference

- Phase shift 0°
- Static Angle mode
- 26 V Line-to-Line
- 26 V Reference
- 400 Hz
- Sine modulation mode set (but not enabled)

3.14.16 **LATCH DATA COMMAND**

This command is used to latch the data for the following commands: ***o *r *f *p *a *b**. If the latch command is not sent, the subsequent data will update the last selected function. The Latch Data command is:

***C**

3.14.17 **CALIBRATION COMMAND**

This command calibrates the RSS at the present voltage and frequency. Calibration requires approximately 12 seconds to complete. Additional commands sent while the RSS is calibrating will be delayed until the calibration is complete and then executed.

NOTE

Calibration is not permitted when an overload condition exists (OVLD and 0.0 VL-L displayed) or if L-L voltage is set to zero.

The format of the calibration command is

***c**

When the RSS is in remote mode, the RSS will automatically perform a calibration anytime the frequency or Line-to-Line voltage is changed more than 10% from its last value. All subsequent messages will be delayed by the interface until the calibration is complete and then executed.

Table 3-2
Commands

	Command	
Angle	*A	Data will enter the angle buffer, subsequent data will automatically update the angle value.
Function	*B	Function data select. The present angle data is latched, subsequent data will NOT automatically update the angle value.
Synchro Mode	*S	Places the RSS in Synchro output format mode
Resolver Mode	*R	Places the RSS in Resolver output format mode
Internal Reference	*N	Selects internal reference mode
External Reference	*E	Selects external reference mode
Phase Shift 0°	*F	Selects zero degrees signal / reference phase shift
Phase Shift	*I	(Capital i) Enables programmed signal / reference phase shift
Static Angle	*D	Selects static angle operation mode
Dynamic Angle	*T	Selects dynamic angle operation mode
Signal Voltage		
11.8	*1	Programs 11.8 Vrms line-to-line voltage
26	*2	Programs 26.0 Vrms line-to-line voltage
90	*9	Programs 90.0 Vrms line-to-line voltage
Programmed	*5	Programs the output line-to-line voltage to the stored value
Reference Voltage		
26	*L	Programs 26.0 Vrms line-to-line reference voltage
115	*H	Programs 115 Vrms line-to-line reference voltage
6.8	*l	Programs 6.8 Vrms line-to-line reference voltage
Programmed	*h	Programs the line-to-line reference voltage to the stored value
Reference Frequency		
400 Hz	*4	Programs the reference frequency to 400 Hz
60 Hz	*6	Programs the reference frequency to 60 Hz
800 Hz	*8	Programs the reference frequency to 800 Hz
Programmed	*7	Programs the reference frequency to the stored value
Dynamic Modes		
CW	*+	Constant velocity Clockwise
CCW	*-	Constant velocity Counterclockwise
Sine	*X*M	Sine wave modulation
Triangle	*Y*M	Triangular wave modulation
Square	*Z*M	Square wave modulation
Preset	*P	Equivalent to *A*R*N*F*D*2*L*4*M*X
Data Input		
Angle Data	*A	DDD.DDDD*A (°)
Signal Voltage	*o	DDD.DDDD*o (Vrms)
Ref. Voltage	*r	DDD.DDDD*r (Vrms)
Ref. Frequency	*f	DDD.DDDD*f (KHz)
Phase Shift	*p	DDD.DDDD*p (°)
Dynamic Data		
Frequency	*a	000.DDDD*r (KHz)
Peak Rate	*b	DDD. DDDD*b (1000°/sec)
Sq. Wave Ampl.	*b	DDD.DDDD*b (° pk-pk)
Latch Data	*C	This command is used to latch the data for the following commands: *o *r *f *p *a *b. If the latch command (*C) is not sent, the subsequent data will update the last selected function.
Calibrate	*c	Perform calibration at the current signal voltage and frequency

Note: When programming data other than angle data, the function data select command (*B) must always precede the data. Otherwise the angle data will also be changed.

CHAPTER 4
PRINCIPLES OF OPERATION

4.1 SCOPE

This chapter contains the principles of operation for the Model 5300 Resolver/Synchro Standard (RSS). The principles are prefaced by an overview of synchro and resolver conventions.

The principles of operation for the RSS are described in two levels. The system level description uses a system block diagram that shows the overall tie-in between the major functional assemblies of the RSS. The functional level description uses block diagrams of each functional assembly and describes the essential control and data signals that the assembly processes.

The principles of operation support an intermediate maintenance level wherein defective shop replaceable assemblies (SRA) are fault-isolated and the RSS is repaired by removal and replacement of the defective SRA.

4.2 SYNCHRO AND RESOLVER CONVENTIONS

Conventions for polarities, terminal designation and direction of shaft rotation for synchros and resolvers are most frequently defined in accordance with military specifications MIL-S-20708 (synchros) and MIL-R-2153 (resolvers). The RSS is provided with terminal designations and electrical characteristics to these specifications.

Note

- In applying the conventions, exercise caution that the manufacturer has followed the MIL convention.
- Check that the system use has not dictated a change in convention for a different characteristic (for example, direction reversal or angular offset).

4.2.1 SYNCHRO TRANSMITTER CONVENTIONS

$E(S1\text{-}S3) = -NE(R1\text{-}R2) \sin \theta$
$E(S3\text{-}S2) = -NE(R1\text{-}R2) \sin (\theta + 120°)$
$E(S2\text{-}S1) = -NE(R1\text{-}R2) \sin (\theta + 240°)$

Where E(S1-S3) is the stator voltage S1 with respect to S3. Other stator and rotor voltages are similarly defined. N is the ratio of the maximum voltage across a pair of stator terminals to the voltage across the rotor terminals. θ is the shaft angle displacement from electrical zero which satisfies these equations. A schematic of the synchro transmitter is shown in figure 4-1.

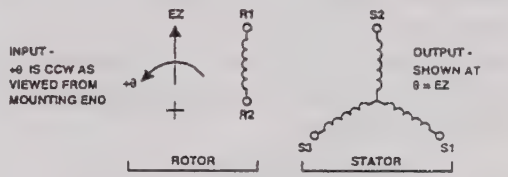

Figure 4-1. Synchro Transmitter, Schematic

4.2.2 RESOLVER TRANSMITTER CONVENTIONS

For rotor energized resolvers, the following equations apply:

$E(S1\text{-}S3) = -NE(R1\text{-}R3)\cos \theta - NE(R2\text{-}R4)\sin \theta$
$E(S2\text{-}S4) = -NE(R2\text{-}R4)\cos \theta - NE(R1\text{-}R3)\sin \theta$

A rotor energized resolver transmitter schematic is shown in figure 4-2. Input and output may be reversed for stator energized devices.

Because the NAI standard assumes an R2R4

energized resolver, the resolver outputs become:

$E(S1\text{-}S3) = -NE(R2\text{-}R4)\sin\theta$
$E(S2\text{-}S4) = +NE(R2\text{-}R4)\cos\theta$

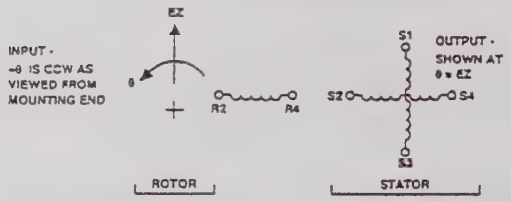

Figure 4-2. Resolver Transmitter, Schematic

4.3 SYSTEM LEVEL PRINCIPLES OF OPERATION

The RSS system block diagram is shown in figure 4-3. The RSS consists of five major functional assemblies; the analog board, the sine/cosine board, the system board, the display/keyboard assembly, and the power supply system. These functional assemblies and an overview of the software are described in the following paragraphs.

4.3.1 ANALOG BOARD

The analog board generates a precise reference waveform that drives isolation/tapped transformers T3 and T4 for the sine and cosine channels of the sine/cosine board. The analog board also provides an externally generated reference output to jacks on the front panel and terminals on the rear panel terminal block whereby a reference voltage may be applied to simulate the rotor of a synchro or resolver.

The input to the analog board may be from an external source, in which case the internal reference circuits are not selected. The external reference is precisely level adjusted with the (protected) autoranging and AGC circuits. Control of the analog board is provided by the system board. The analog board also contains the measurement circuits, fine level and electrical phase control circuits, and the calibration circuits.

4.3.2 SINE/COSINE BOARD

The sine/cosine board consists of two similar (but isolated) channels enabled by the analog board to provide precise, low impedance outputs to simulate the stator windings of a synchro or resolver. Precision, 21-bit resolution, for the dynamic rotational angles for each channel is achieved with fast-switched transformers/MUX circuits and an MDAC circuit. The tapped transformer/MUX circuit provides the upper four most significant bits (MSB), the MDAC circuits provide the lower 16-bits, and the isolation transformer/MUX circuit provides the sign bit. The isolation transformer/MUX circuit feeds the tapped transformer which subsequently feeds the MDAC circuit. The combination of outputs from the tapped transformer/MUX circuit and the MDAC circuit are summed and provide the input for a power amplifier. The outputs for the power amplifier are accessible from front panel jacks and the rear panel terminal block. The sine/cosine board is controlled by the system board.

4.3.3 SYSTEM BOARD

The system board provides microprocessor control over all functions of the RSS. Programmed by firmware residing in an Erasable Programmable Read Only Memory (EPROM), the system board drives the display board and samples the keyboard assembly, performs digital signal processing to compute angle and reference data, samples IEEE-488 connector J23 on the rear panel, and provides handshaking with an external computer during remote operation. The system board functions as a distribution bus for all dc power supplies, and as a mother board for the interconnect board. The interconnect board functions as a daughter board for the analog and sine/cosine boards mounted in the card file.

4.3.4 DISPLAY/KEYBOARD ASSEMBLY

The display/keyboard assembly consists of a

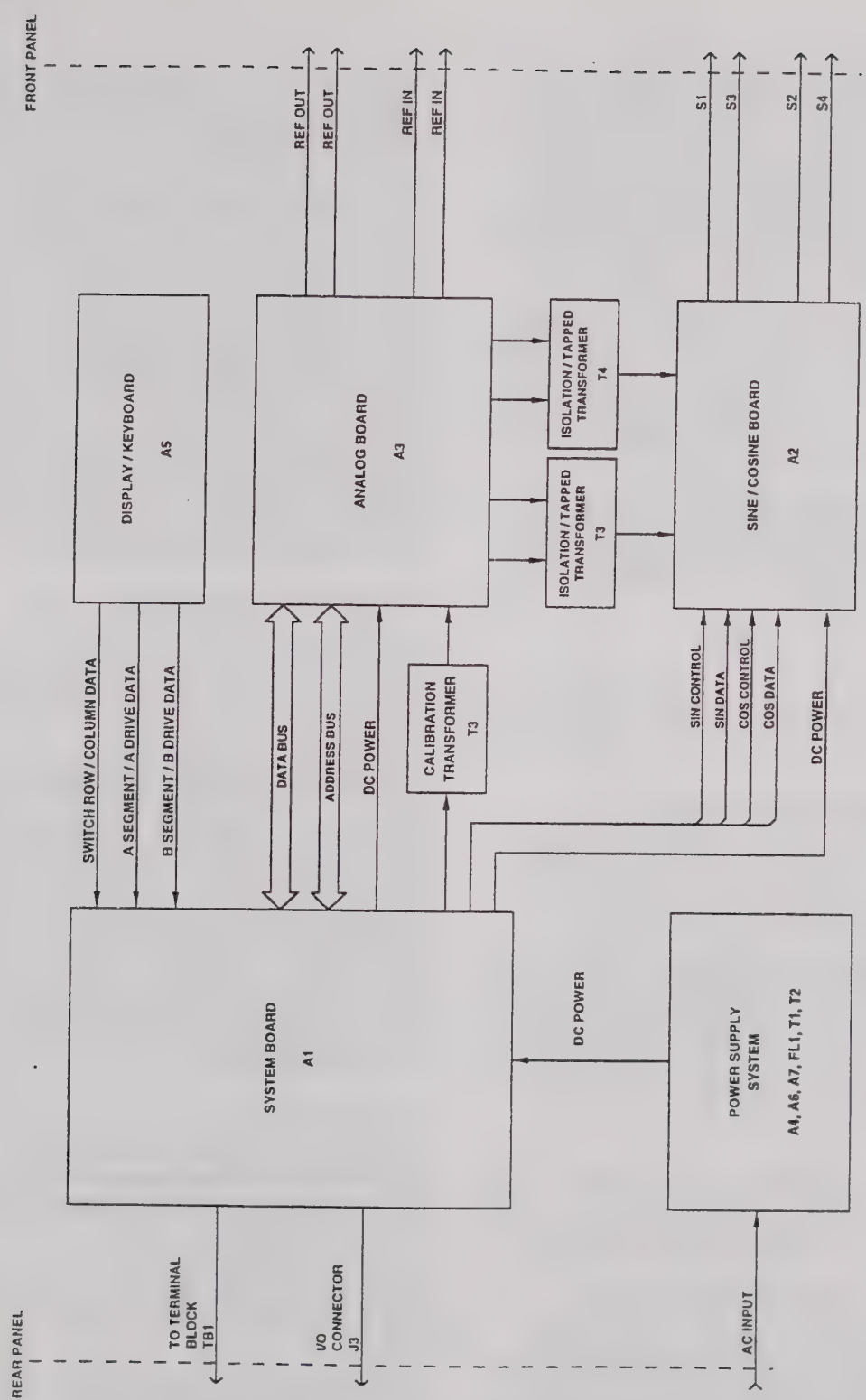

Figure 4-3. System Block Diagram

Light Emitting Diode (LED) display and a keyboard assembly. The display indicates operating conditions of the RSS, and the keyboard provides the operator with a means of entering data into the RSS. The display consists of two panels; a primary 8-digit numerical panel with 19 LED indicators (SYN, RES, PHASE OFFSET, Sine wave symbol, Triangle wave symbol, Square wave symbol, Rotational symbol, OVLD, °/S, DEG, Hz, INT REF, EXT REF, OOR, CAL, SRQ, LISTEN, TALK, and REM) and a secondary numerical panel displaying 3-digit voltage and frequency with four LED indicators (V_{REF}, V_{L-L}, Hz, and KHz).

The keyboard assembly contains 20 push button switches, a 12-key (see following note) numeric pad (digits 0 through 9, ±, and decimal point), and an optical encoder.

Note

The front panel STORE push button switch, if installed, does not function.

4.3.5 **POWER SUPPLY SYSTEM**

The power supply system consists of a main power supply board and two, identical, isolated power supply assemblies.

4.3.5.1 **Main Power Supply Board**. The main power supply board receives AC input from main transformer T1 and performs rectification, filtering,. and regulation to provide continuous +5 Vdc and ±15 Vdc power to the system board and analog board.

Note

The system board acts as a distribution bus for all dc power.

The main power supply board also provides, after a turn-on delay, ±48 Vdc and ±175 Vdc to the RSS circuits. These outputs are switched from the RSS system by relays. The main power supply board has a hi-voltage overload sense circuit that detects reference output overloads and subsequently relay-isolates all outputs upon overload. The main power supply board switches ac power to the isolated power transformer via a relay.

4.5.3.2 **Isolated Power Supply**. The isolated power supplies are identical and provide separate ±15 Vdc, ±20 Vdc, ±48 Vdc, and ±150 Vdc to each channel of the sine/cosine board. Similar to the main power supply board, each isolated power supply has a hi-voltage overload sense circuit that detects simulator output S1 through S4 overloads and isolates all the outputs. The main power supply board is attached to the chassis, whereas the isolated power supplies plug into connectors on the system board. The isolated power supplies are identical and may be used in either connector location.

4.3.6 **SOFTWARE OVERVIEW**

This overview describes the two major sections of the software; the Startup Code and the Operational Code.

4.3.6.1 **STARTUP CODE**. The startup code is responsible for determining operability of the basic hardware components, initializing the hardware, and starting the operating system. When the RSS is turned on, the startup code causes the RSS signals to be isolated, runs the power-up tests to test the display, CPU, RAM, ROM, EEPROM, and two digital signal processors (DSP). If the power-up test detects an error, an error message is displayed, if possible, and processing is halted.

Assuming that an error has not occurred, the startup code next initializes the system stack and heap, programmable timer, keyboard and remote interface hardware, main display, voltage display and frequency displays.

The RSS is then set to its default values, the signals are connected, and the main loop is entered.

4.3.6.2 **OPERATIONAL CODE**. The operational code is a system of tasks that are run in a real-time, multitasking environment. These tasks are the timer, overload handler, keystroke

processor, remote interrupt processor, and the main loop.

The timer task is a synchronous task that runs in response to the programmable timer interrupt. This task handles interprocess synchronization and the main system coordination.

The overload handler task is a high priority asynchronous task that runs in response to a RSS detected overload condition. The handler turns down and isolates the output to prevent harm to the RSS and possible injury to the operator.

The keystroke processor is an asynchronous task that runs in response to a key being depressed. The handler debounces the key, and decodes and buffers the keystroke. Keystroke buffer status is tracked by the operating system.

The remote interrupt processor is an asynchronous task that runs in response to a remote command or a status change at the IEEE-488 interface. The remote command processor buffers incoming command characters, sends outgoing message characters, and informs the operating system of remote status changes.

The main loop is a background task that monitors the status of the keystroke buffer and remote processor buffer. If a remote command has been buffered, the command processor is called. If a keystroke has been buffered, the keystroke processor is called. The main loop also coordinates the measurement and display of the reference voltage and frequency, and auto-ranging when the RSS is operating in external reference mode.

The keystroke processor interprets local inputs using lower level data input routines, and calls the appropriate RSS interface routines. If the interface routine returns an error status, the error number is posted on the main display of the RSS.

The remote interpreter interprets commands and returns status via the IEEE-488 interface. As the syntax is checked and parameters are converted, an error message is queued if an invalid command is detected. The error message is returned on the next error query command. hen a valid command is parsed, the RSS routine is called with the input parameters. If the interface routine returns an error status, an error message is queued and returned for the next error query command. In the case of a query command, the RSS interface routine is called to obtain the RSS setting returned by the IEEE-488 interface.

The RSS interface routines provide a common interface to the remote command and keystroke processors and are used to set or query RSS parameters. Parameters are tested for limit errors and settings conflicts.

The lower level instrument drivers and DSP interface routines are called to carry out the intended process. These routines return an integer value that indicates success or failure status.

Note

The instrument drivers are at the lowest level and handle the details of writing values to the RSS registers.

4.4 FUNCTIONAL LEVEL PRINCIPLES OF OPERATION

The functional block diagrams for the RSS are shown in figure 4-4 through 4-9. The analog board, the sine/cosine board, the system board, the display/keyboard assembly, and the power supply system are described in the following paragraphs.

Note

For reference, the corresponding schematic diagram figure number (Chapter 7) is shown with the figure for the block diagram.

4.4.1 ANALOG BOARD (Figure 4-4, 7-1)

The analog board produces two types of output waveforms: One output drives isolation/tapped transformers for the sine/cosine board, enabling it to produce signals to drive, or simulate, the stator windings of a synchro or resolver; the

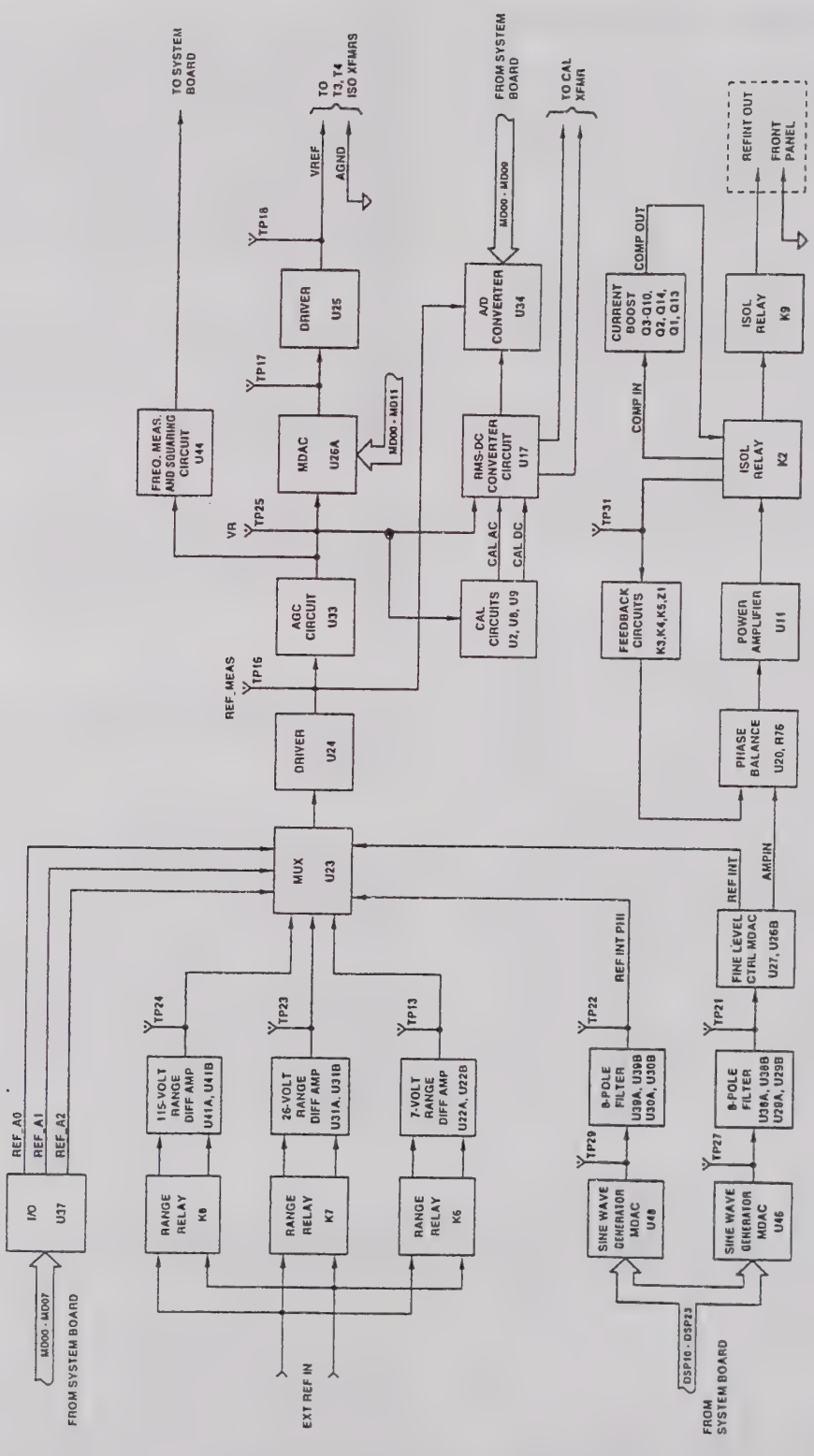

Figure 4-4. Analog Board, Block Diagram

second output is an internal generated reference waveform used to drive, or simulate, the rotor windings of a synchro or resolver. The analog board is controlled by the system board data and Reference DSP bus. In addition to the output waveforms, the analog board has the means to measure and calibrate the sine/cosine board simulator outputs

Note

The waveform that drives the sine/cosine board is internally generated or provided from an external reference source via jacks on the front panel of the RSS or the terminal block on the rear panel of the RSS.

4.4.1.1 **Internal Reference Output**. A reference voltage produced by MDAC U48 and signals from the system board DSP bus drive the input of sine generator MDAC U46 and U48 to produce two pseudo sine waveforms consisting of voltage level steps. The waveforms are processed by 8-pole, low pass filter circuits to remove the high frequency components and the results are two sine waveforms. The output of U29B is applied to fine level control MDAC U26B and MUX U23 via U27. The phase shifted waveform (REFINT_PHI) is applied to MUX U23 only.

MDAC U26B provides a programmable fine level control (AMPIN) to the input of the phase balance circuits. The output of the phase balance circuits is applied to power amplifier U11. The output amplitude range is determined by the feedback and attenuation/compensation select circuits in the power amplifier, and the output level is determined by the combination of the range selected and the fine level control MDAC U26B. With the power amplifier in the highest range (26V to 115V), the output of U11 is connected to the front panel REF OUTPUT jacks and rear terminal block and may be used to drive or simulate the rotor winding of a synchro or resolver.

Note

For operation below 26 V, the output of U11 is switched to the complimentary pair/driver circuits by relay K2 (COMPIN). The output of this circuit (COMPOUT) provides a current boost to the device connected to the outputs.

4.4.1.2 **Sine/Cosine Board Input**. MUX U23 selects one of three input waveforms; the normal reference waveform (REFINT), the phase shifted reference waveform (REFINT_PHI), or an external input waveform applied via the front panel REF INPUT jacks or terminal block on the rear panel.

Note

The range for the external input waveform is automatically selected (autoranging) by range relays and difference amplifiers shown on figure 4-4.

The selected input waveform (REF_MEAS) is applied to the AGC circuits to develop a constant amplitude waveform (VR) to MDAC U26A. REF_MEAS is also applied to the measurement/calibration circuits (paragraph 4.4.1.3).

The output amplitude of MDAC U26A is adjusted by data (MD00 - MD11) from the system board data bus and connected in parallel (via driver U25) to the primary winding of isolation/tapped transformers T3 and T4. The secondary winding of T3 and T4 drive each channel of the sine/cosine board. MDAC U26A provides programmable fine level control of the L-L output.

4.4.1.3 **Measurement/Calibration Circuits**. In external reference mode, the REF_MEAS signal is processed by RMS-to-DC converter U17 and applied to A/D converter U34. The output of U34 is placed on the data bus to drive the amplitude display on the front panel. When calibration is selected, switch U16A connects CAL_AC from the calibration circuits to RMS-to-DC converter U17 and processes the data with A/D converter U34. Optimal ranging of the sine, cosine null signal is performed. CAL_DC is applied directly to A/D converter U34 to measure the in-phase null with respect to VR and subsequentially determine optimal

correction. REF_MEAS is also applied to frequency measurement (hard squaring) circuit U44 to drive the frequency display on the front panel.

4.4.2 SINE/COSINE BOARD (Figure 4-5, 7-2)

The sine/cosine board contains two identical, galvanic isolated channels that provide outputs

that drive or simulate the stator windings of a synchro or resolver.

Note

The sine channel has an additional phase balance adjustment.

The sine/cosine board receives its input from the isolation/tapped transformers as previously described. The sine/cosine board is controlled by the sine register, cosine register, and sine/cosine control register located on the system board.

Note

Since the two channels are identical, only the sine channel function will be discussed. The reference designation for cosine channel components are enclosed in a bracket [ ].

Inputs from the secondary of isolation/tapped transformer T4 [T3] are applied to the quadrant select circuit where the correct polarity is assigned. The output of the quadrant select circuit is applied to the tapped secondary of T4 [T3]. This 15-tapped (positive) winding is used with MUX U47 [U58] to provide 4-bit (coarse) resolution for the selected angle. The tapped secondary has an additional negative tap winding used by MDAC U23 [U28] to provide 16-bit (fine) resolution of the selected angle. The output of the MUX and MDAC are added by summation circuit U22 [U27] an together provide 20-bit resolution plus sign (or 21-bits) of the selected sine [cosine] of the angle.

As an example, if a particular angle and voltage range is selected with no modulation applied, the system board Angle DSP circuitry determines the appropriate data and applies it, via the system board sine and cosine registers, to MUX U47 [U48] and MDAC U23 [U28]. The MUX selects the appropriate tap, and the MDAC output is adjusted to provide the correct value for that angle. One bit also select the proper polarity.

When the signal is modulated, the system board Angle DSP circuitry rapidly computes each data value and applies it in real time, selecting various transformer taps and MDAC outputs.

To prevent glitches on the output when switching between different taps of the transformer, as well as switching the MDAC, a track and hold (T/H) circuit is used to hold the output a short period of time through the transition. The output from the T/H circuit is applied to power amplifier U38 [U14]. The output of this amplifier is connected (via isolation relays) to the rear panel terminal block and front panel jacks S1 - S3 [S2 - S4] and may be used to drive or simulate the stator windings of a synchro or resolver.

Note

Sense data SS1 - SS3 [SS2 - SS4] at the load may be connected to corresponding inputs to the rear panel terminal board to enable the sine/cosine circuits to compensate for line losses.

4.4.3 SYSTEM BOARD (Figure 4-6, 7-3)

The system board circuits are responsible for controlling the entire operation of the RSS and are described in the following paragraphs.

4.4.3.1 CPU. The CPU U34 runs the program (firmware) stored in EPROM U21, 22 at 10 MHz and controls RSS hardware components via its address bus (MA01 - MA23) and data bus (MD00-MD15). Upon turn on, the start up code in firmware runs the power-up tests to check the display FPGA's (U29, 48), CPU (U34), RAM (U15), EPROM (U21, 22), and two DSP's (U2, 4). After power-up tests are completed and no errors are detected, the CPU sets the RSS to its default values and polls the interface and keyboard assembly for inputs. The system board

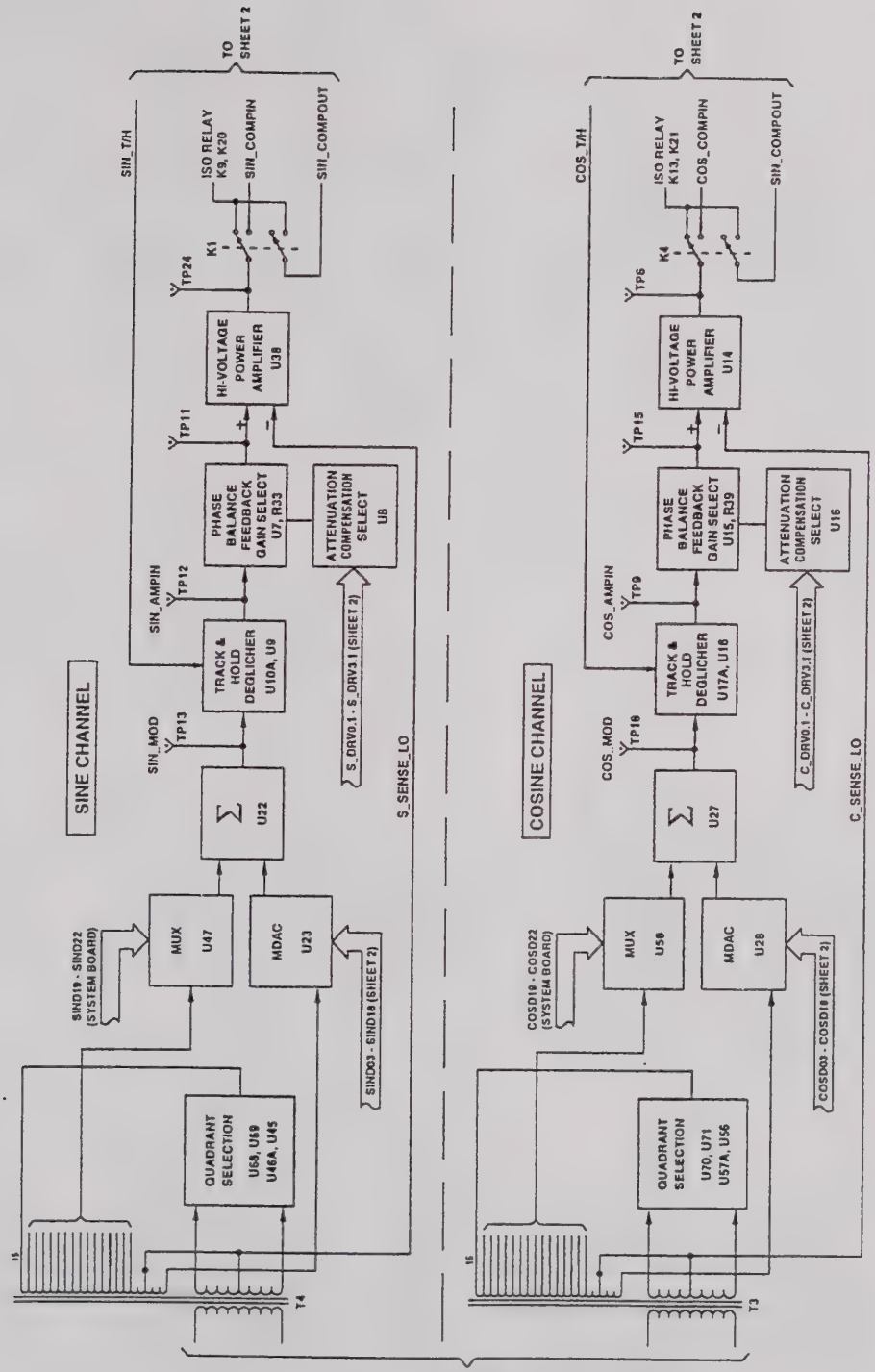

Figure 4-5. Sine/Cosine Board, Block Diagram (Sheet 1 of 2)

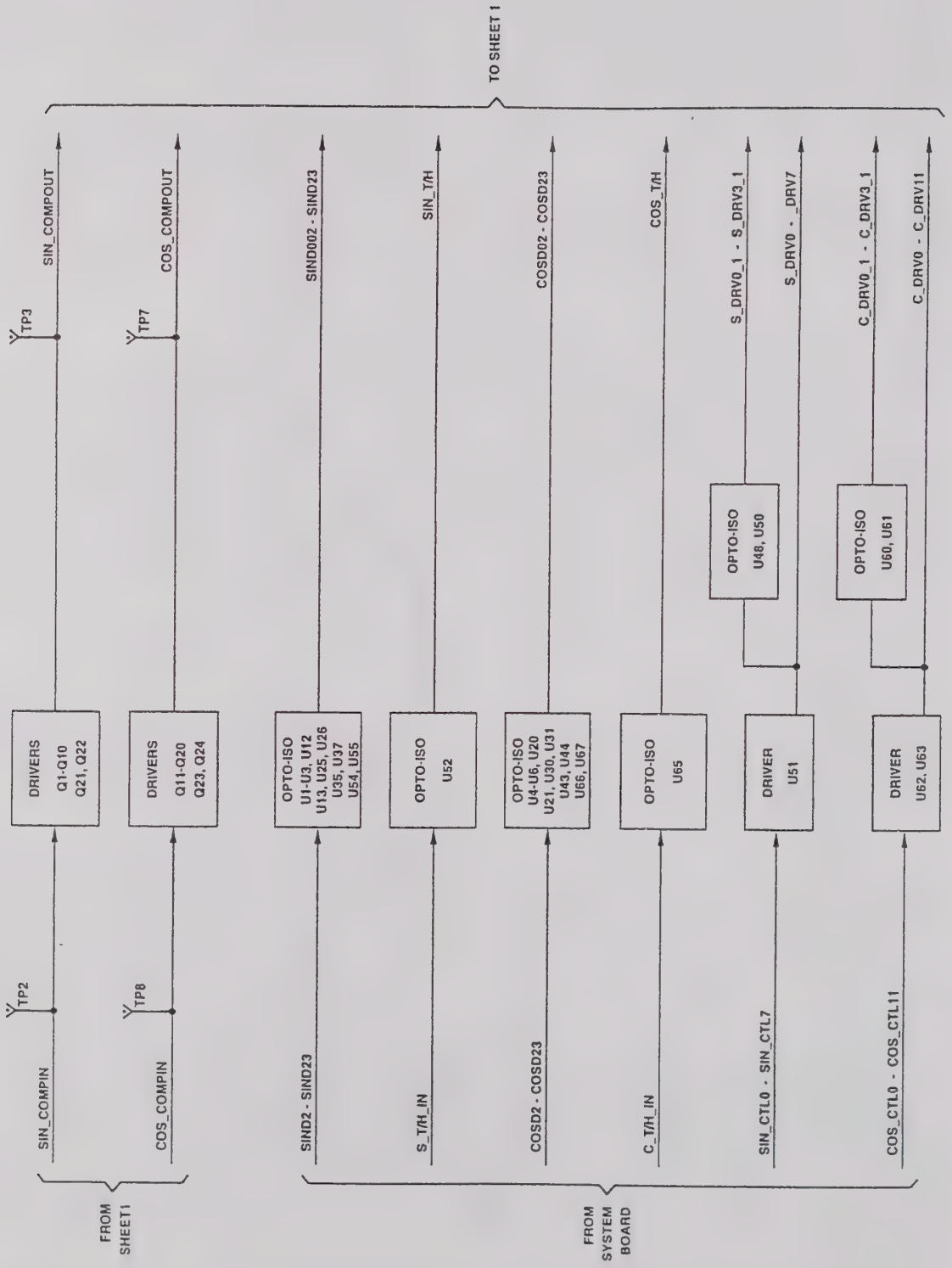

Figure 4-5. Sine/Cosine Board Block Diagram (Sheet 2 of 2)

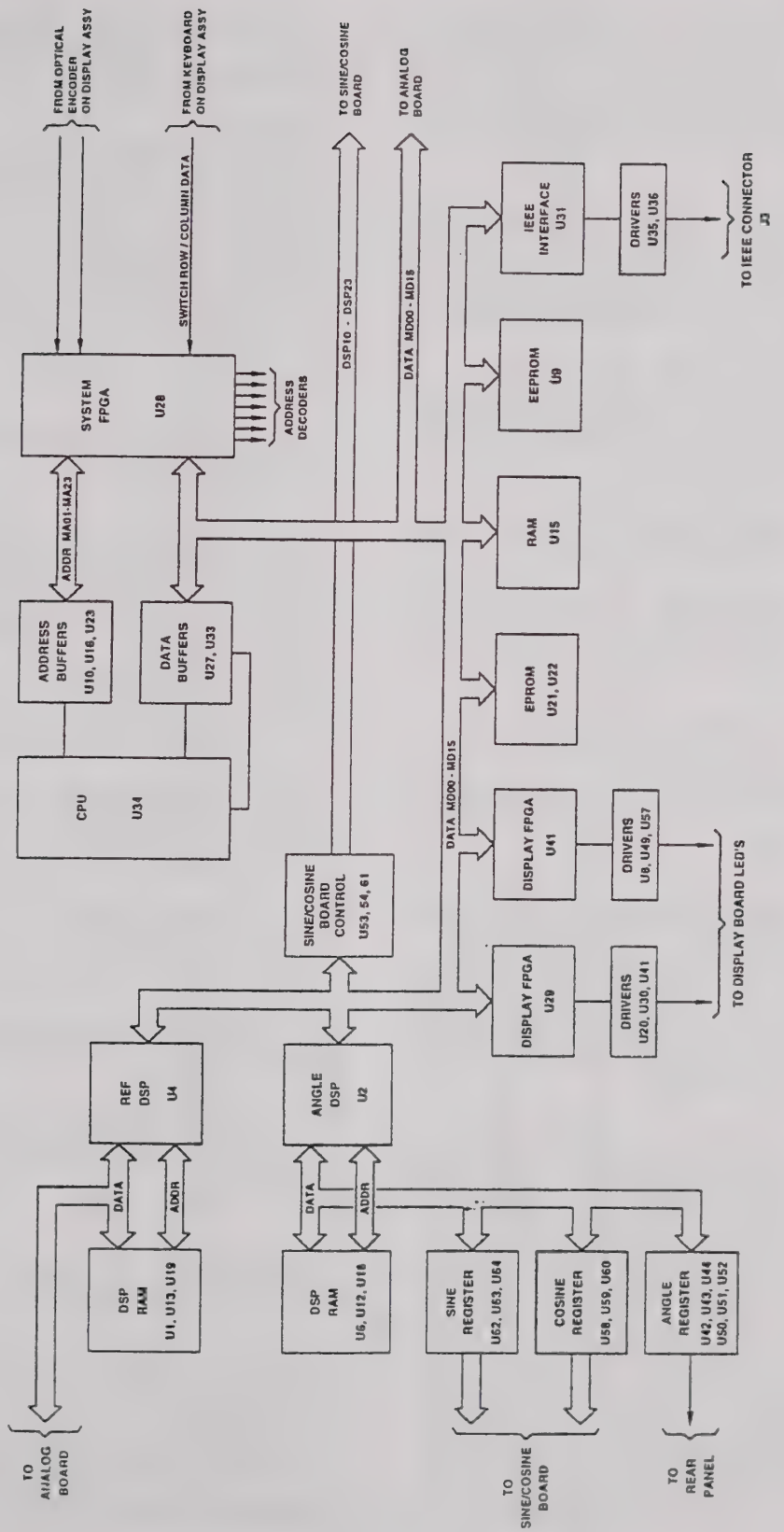

Figure 4-6. System board, block diagram

controls the sine/cosine board via the sine register (U62, 63, 64), cosine register (U58, 59, 60), and sine/cosine control register (U53,54, 61). The system board controls the analog board via reference DSP U4 and DSP RAM U7, 13, 19).

4.4.3.2 **System FPGA**. The system FPGA U28 is connected to the CPU address and data busses. The system FPGA samples keyboard and optical encoder outputs and provides address decodes [list here].

4.4.3.3 **Interface U31**. With drivers U35 and U36, interface U31 enables communication between the RSS and an external computer using IEEE-488 interface protocol.

4.4.3.4 **EPROM U21, U22**. These chips contain the firmware for CPU U34.

4.4.3.5 **EEPROM U9**. The EEPROM stores the IEEE-488 address entered via the front panel.

Figure 4-6. System Board, Block Diagram

4.4.3.6 **RAM U1, U14**. The RAM is used by the CPU as a scratch-pad memory to store temporary data.

4.4.3.7 **Display FPGA U29, U48**. The display FPGA's are connected to data bus (MD00 - MD07) and address bus (MA01 - MA04). With LED drivers U20, U30 U41, (U29), and U8, U49, U57 (U48), the display FPGA's control operation of the LED segments on the display/keyboard assembly.

4.4.3.8 **Angle DSP U2**. Angle DSP U2 is connected to address bus (MA01 - MA03) and data bus (MD00 - MD07). Upon initialization, the CPU writes sine and cosine subtables to DSP RAM U6, 12, 18. Using data from the RAM subtable, the DSP calculates the sine and cosine of the entered angle and writes the values to the sine/cosine board. The DSP also performs modulation when enabled. The 24-bit output word (BDSP1D00 - BDSP1D23) is bussed to sine register (U62, U63, U64), cosine register (U58, U59, U60), and angle register (U42, U43, U44, U50, U51, U52) via bus drivers U5, U11, U17. The sine, cosine, and angle registers are enabled by -SINE, -COSINE, and -DSPANGLE, respectively.

4.4.3.9. **Reference DSP U4**. Reference DSP U4 is connected to address bus (MA01 - MA03) and data bus (MD00 - MD07). Upon initialization, the CPU writes sine and cosine subtables to DSP RAM U7, 13, 19. Using data from the RAM subtable, the DSP generates the internal reference waveform. A 14-bit output word (DSP2D10 - DSP2D13) is bussed to the analog board.

4.4.3.10 **Sine/Cosine Board Control Registers U53, U54, U61**.

The CPU controls operation of the sine/cosine board by storing sine control data (MD00 - MD07) and cosine control data (MD00 - MD15) into the sine/cosine control register U53, 54 61).

4.4.3.11 **Sine Register**. The sine register (U62,63, 64) stores sine data from the angle DSP for use by the sine/cosine board circuits.

4.4.3.12 **Cosine Register**. The cosine register (U58, 59, 60) stores cosine data from the angle DSP for use by the sine/cosine board circuits.

4.4.3.13 **Angle Register**. The angle register (U42-44, 50-52) stores data from the angle DSP and presents it to the RSS rear panel.

4.4.4 **DISPLAY/KEYBOARD ASSEMBLY (Figure 4-7, 7-4)**

The display/keyboard assembly consists of a main display, voltage display, and keyboard assembly.

Note

Refer to Chapter 3, section I for a description of push button switches and indicators.

The display segments are turned on by the application of ASEG9-ASEG24 (main display) or BSEG9-BSEG24 (voltage display) signals with a ADRAIN1-ADRAIN4 (main display) or BDRAIN1-BDARIN4 (voltage display) pulse. As the segments share common ASEG## or

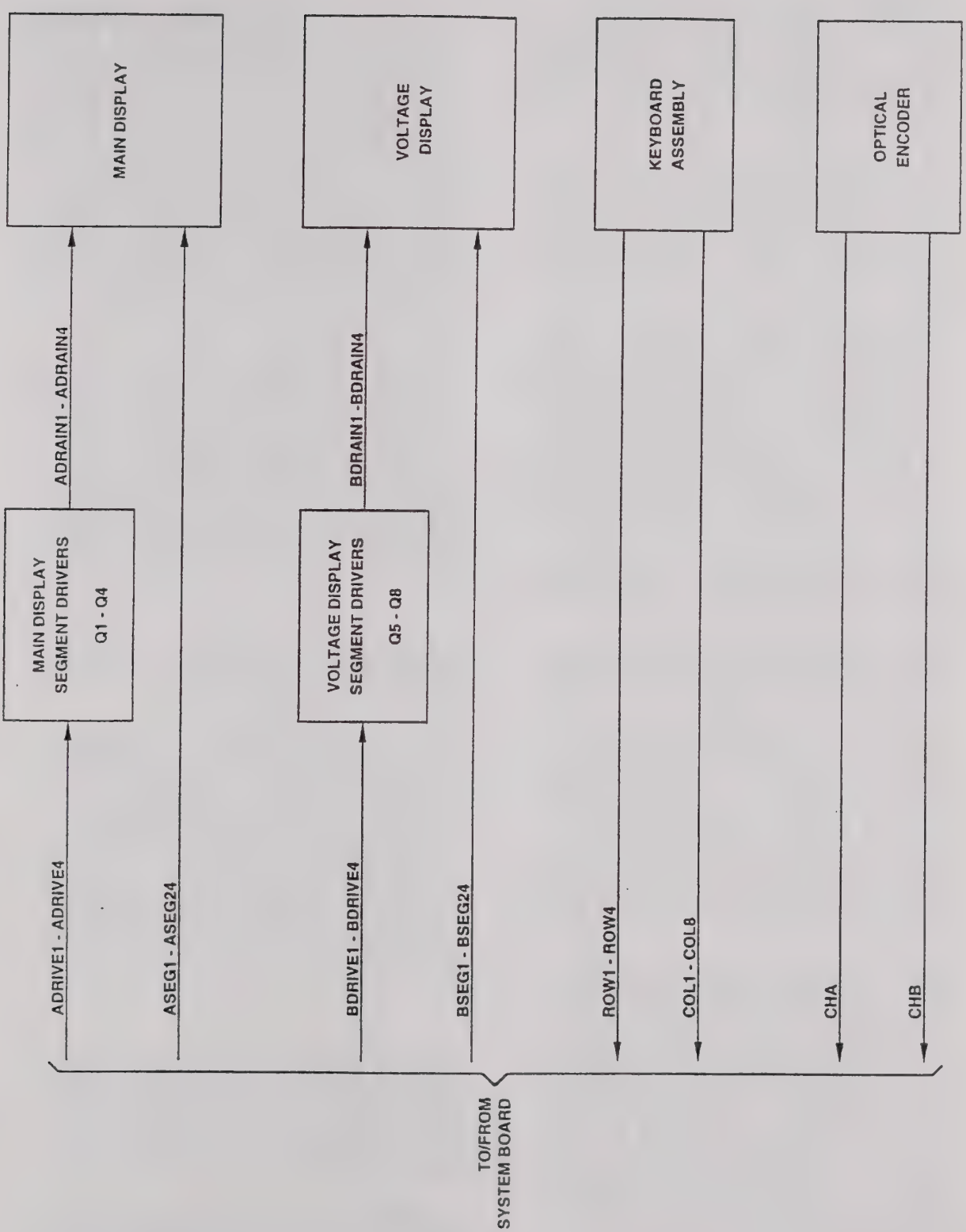

Figure 4-7. Display/Keyboard Block Diagram

BSEG## connections, the DRAIN signals are multiplexed to enable selection of individual LED's. The system board DISPLAY_FPGA U48 provides the segment signals and Drain signals are provided by system board SYSFPGA U28.

The remaining indicators on the main display, voltage display, and keyboard are individual LED's and are controlled in the same manner as the segmented displays (see figure 7-4 for specific LED's.

The keyboard assembly consists of 32 push button switches and an optical encoder. System board SYSFGPA U28 polls the keyboard and detects a specific push button by its ROW and COL position. As an example (see fig 7-4), if the OUTPUT ANGLE push button is pressed, U28 detects continuity between ROW1 and COL1 and initiates the function of the push button.
System board SYSFPGA U28 monitors the optical encoder and responds to pulses generated when the encoder is rotated.

4.4.5 **MAIN POWER SUPPLY BOARD (Figure 4-8, 7-5)**

The main power supply board provides +5 Vdc, ±15 Vdc, ±48 Vdc, and ±175 Vdc to the system and analog boards. With the exception of the +5 Vdc and ± 15 Vdc outputs, all other outputs of the main power supply board are switched by relay K1 and K3. This feature allows the analog and sine/cosine boards to be set up during power-up before turning on the high voltages.

4.4.5.1 **+5 Vdc Circuits**. When power is applied to the RSS, 115 (or 230) Vac is applied to the primary of main transformer T1. As excitation appears at the secondary winding of T1, full wave rectification is accomplished by bridge rectifier CR9. At the positive (+) output of CR9, the unregulated voltage is filtered by C9, C10, C11 and applied to the input of voltage regulator U3. The regulated +5 Vdc output is filtered by C14, C15, and C16 and applied to the system and analog boards.

4.4.5.2 **± 15 Vdc Circuits**. As excitation appears at the secondary winding of T1, full wave rectification is accomplished by CR1 and CR2 (+), and CR3 and CR4 (-). The positive (+) unregulated output of CR1 and CR2 is filtered by C1 and C3 and applied to the input of regulator U1. The regulated +15 Vdc is filtered by C5 and C7 and applied to the system and analog boards. The negative (-) unregulated output of CR3 and CR4 is filtered by C2 and C4 and applied to the input of regulator U2. The regulated -15 Vdc is filtered by C6 and C8 and applied to the system and analog boards.

4.4.5.3 **Time Delay**. After a short delay following turn-on, PWR_CTL is received from the system board and turns on Q3 and K3. When K3 contacts close, excitation is applied to the ± 48 Vdc circuits via contacts C and D, and to the ± 175 Vdc circuits via contacts A and B. PWR_CTL also turns on Q4 and K1 to apply excitation to the primary of isolation transformer T2 (contacts 13 and 12).

Note

Isolation transformer T2 provides excitation for the isolated power supplies.

4.4.5.4 **± 48 Vdc Circuits**. After a time delay (previously described), full wave rectification is accomplished by CR13 and CR14 (+), and CR15 and CR16 (-). The positive (+) unregulated output of CR13 and CR14 is filtered by C17 and C20 and applied to the input of regulator U4. The regulated +48 Vdc output is filtered by C22, C24, and C26 and applied to the reference power amplifier complimentary pair driver.

Note

CR12 acts as a half wave rectifier to energize relay K2 and provide input to the high voltage overload sense circuits. When power is turned off, K2 deenergizes and causes the high voltage to bleed to ground.

The negative (-) unregulated output of CR15 and CR16 is filtered by C18 and C21 and applied to

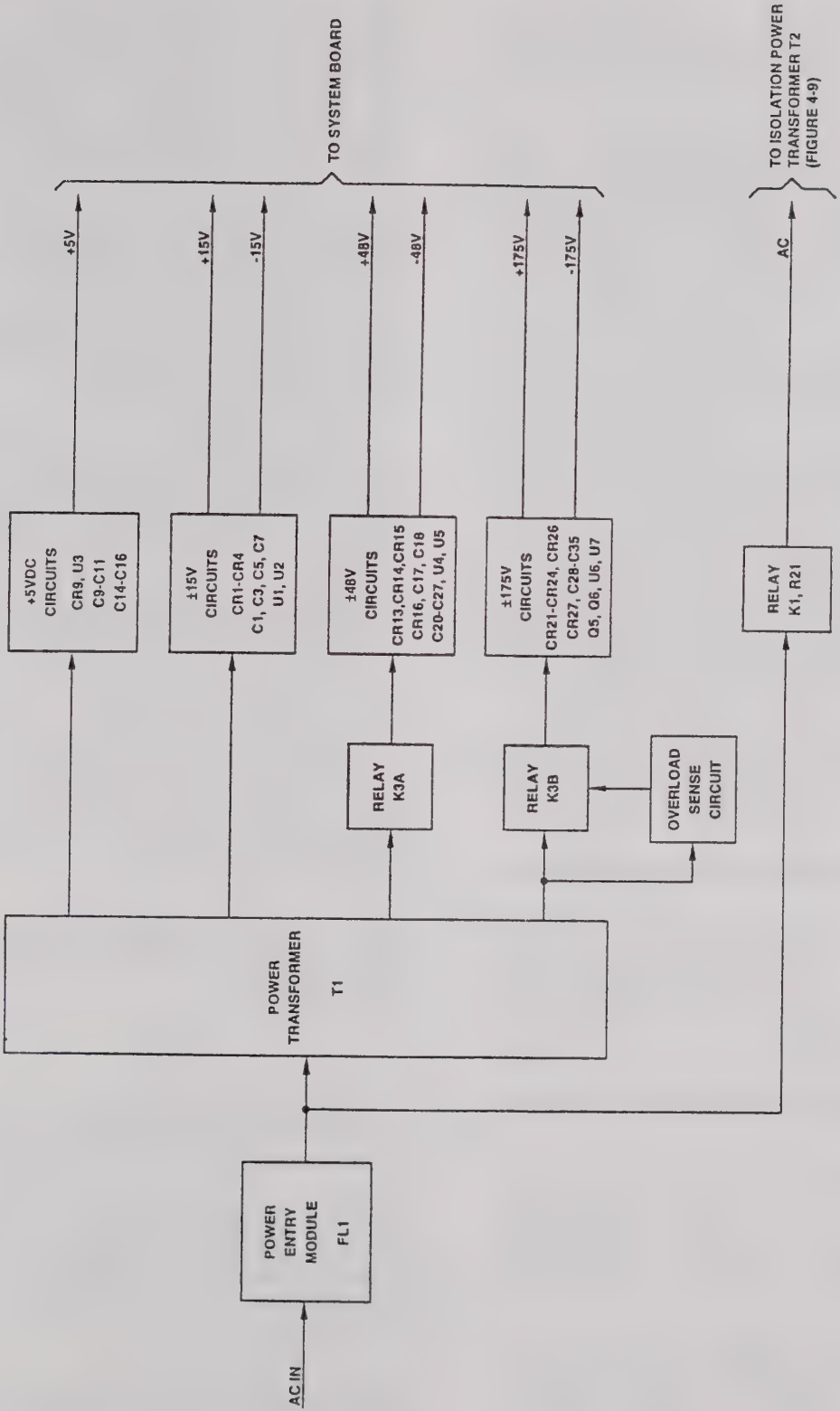

Figure 4-8. Main Power Supply Board, Block Diagram

the input of regulator U5. The regulated -48 Vdc output is filtered by C23, C25, and C27 and applied to the reference power amplifier complimentary pair driver.

4.4.5.5 ± **175 Vdc Circuits**. After a time delay (previously described), full wave rectification is accomplished by CR21 and CR22 (+) and CR23 and CR24 (-). The positive (+) unregulated output of CR21 and CR22 is filtered by C28 and C30 and applied to the cathode of zener diode CR25 and the collector of pass transistor Q5. The zener diodes provide approximately +200 Vdc reference to the base of pass transistor Q5, thereby applying a semi-regulated +200 Vdc to the input of regulator U6. The regulated +175 volt output is filtered by C32 and C34 and used for reference channel high voltage operational amplifier U11. The negative (-) unregulated output of CR23 and CR24 is filtered by C29 and C31 and applied to the anode of zener diodes CR28 and the collector of pass transistor Q6. The zener diodes provide approximately -200 Vdc reference to the base of pass transistor Q6, thereby applying a semi-regulated -200 Vdc to the input of regulator U7. The regulated -175 Vdc output is filtered by C33 and C35 and used for reference channel high voltage operational amplifier U11.

4.4.5.6 **High Voltage Overload Sense Circuit**.

In the case of an overload, the ground current sensed by overload resistor R21 reaches a predetermined value and the overload sense circuits trip and output a low to digital circuits on the system board.

4.4.6 **ISOLATED POWER SUPPLIES (Figure 4-9, 7-6)**

The RSS uses two identical isolated supplies to provide separate ±15, ± 48, ± 20, and ± 150 Vdc to each channel of the sine/cosine board. Unless otherwise indicated, isolated power supply A6 is described.

4.4.6.1 ± **15 Vdc Circuits**. When ac power is applied to the primary of isolation transformer T2, excitation appears at the secondary winding. Full wave rectification is accomplished by CR1 and CR2 (+), and CR3 and CR4 (-). The positive (+) unregulated output is filtered by C1 and C3 and applied to the input of regulator U1. The regulated +15 Vdc output is filtered by C5 and C7 and applied to the sine channel of the sine/cosine board. The negative (-) unregulated output is filtered by C2 and C4 and applied to the input of regulator U2. The regulated -15 Vdc output is filtered by C6 and C8 and applied to the sine channel of the sine/cosine board.

Isolated supply A7 functions identically and provides regulated ±15 Vdc to the cosine channel of the sine/cosine board.

4.4.6.2 ± **48 Vdc Circuits**. When ac power is applied to the primary of isolation transformer T2, excitation appears at the secondary winding. Full wave rectification is accomplished by CR9 and CR10 (+), and CR11 and CR12 (-). The positive (+) unregulated output from the rectifiers is filtered by C25 and C27 and applied to the input of regulator U7. The regulated +48 Vdc output is filtered by C29, C31, and C35 and applied to the sine channel of the sine/cosine board. The negative (-) unregulated output from the rectifiers is filtered by C26 and C28 and applied to the input of regulator U8. The regulated -48 Vdc output is filtered by C30, C32, and C36 and applied to the sine channel of the sine/cosine board.

Isolated supply A7 functions identically and provides ±48 Vdc to the cosine channel of the sine/cosine board.

Note

The ±48 Vdc outputs power the complimentary pair drivers on the sine/cosine board assembly and provide the input for the ±20 Vdc circuits.

4.4.6.3 ± **20 Vdc Circuits**. +48 Vdc is applied to the input of regulator U9. The regulated +20 volt output is filtered by C37 and C39 and applied to the sine channel of the sine/cosine board.

-48 Vdc is applied to the input of regulator U10. The regulated -20 Vdc output is filtered by C38

and C40 and applied to the sine channel of the sine/cosine board.

Isolated supply A7 functions identically and provides regulated ±20 Vdc to the cosine channel of the sine/cosine board.

4.4.6.4 ± **150 Vdc Circuits**. When ac power is applied to the primary of isolation transformer T2, excitation appears at the secondary winding. Full wave rectification is accomplished by CR5 and CR6 (+), and CR7 and CR8 (-). The positive (+) unregulated output from the rectifiers is filtered by C9 and applied to the collector of pass transistor Q1, R5, and the cathode of zener diode CR17. The zener diodes provide a +150 volt reference to the base of pass transistor Q1, thereby regulating the +150 Vdc level at the emitter. The regulated +150 Vdc is filtered by C15, C17, and C19 and applied to the sine channel of the sine/cosine board. The negative (-) unregulated output from the rectifiers is filtered by C10 and applied to the collector of pass transistor Q2, R6, and the anode of zener diode CR20. The zener diodes provide a -150 volt reference to the base of pass transistor Q2, thereby regulating the -150 Vdc level at the emitter. The regulated -150 Vdc is filtered by C16, C18, and C20 and applied to the sine channel of the sine/cosine board. The regulated ±150 Vdc outputs connect the overload circuits.

Isolated supply A7 functions identically and provides regulated ±150 Vdc to the cosine channel of the sine/cosine board.

4.4.6.5 **High Voltage Overload Sense Circuit**.

In the case of an overload, the ground current sensed by overload resistor R9 reaches a predetermined value and the overload sense circuits trip and output a low to digital circuits on the system board.

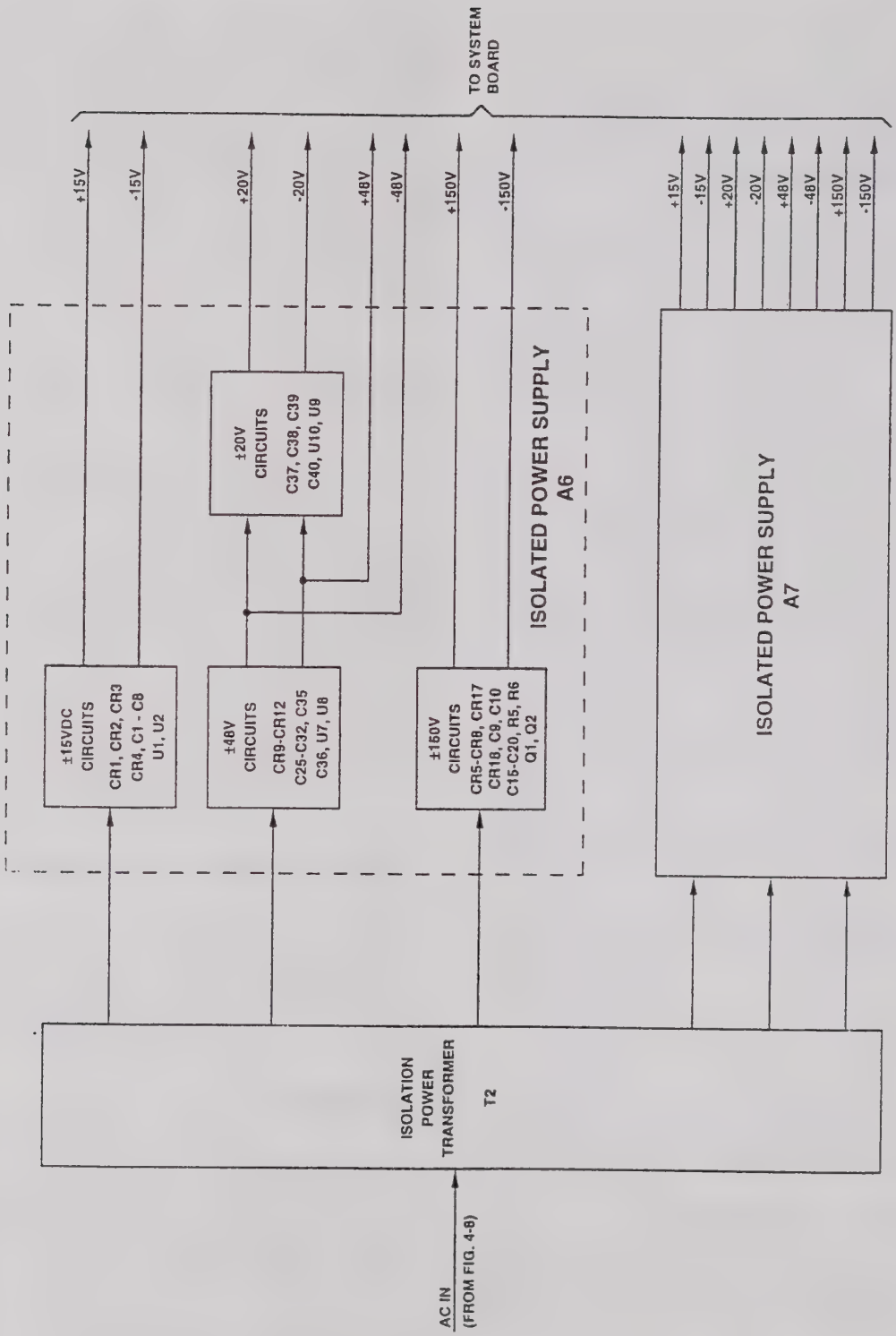

Figure 4-9. Isolated Power Supply, Block Diagram

CHAPTER 5
MAINTENANCE

5.1 GENERAL

This chapter contains maintenance procedures for the Resolver/Synchro Standard (RSS) and consists of five sections. Section I contains the schedule and preventive maintenance procedures for the RSS. Section II contains the performance test whereby the overall operation of the RSS can be verified. Section III contains a fault isolation table to locate defective shop replaceable assemblies (SRA) of the RSS. Section IV contains removal/replacement procedures. Section V contains test and adjustment procedures for the RSS.

5.2 EQUIPMENT/MATERIALS REQUIRED

Table 5-1 lists the equipment and materials required to perform the maintenance procedures in this chapter.

Table 5-1. Equipment/Materials Required for Maintenance

EQUIPMENT/MATERIALS *	MODEL/PART NO.	PARAGRAPH NO.
Sash brush	-	5.5.1, 5.5.2
Lint-free cloth	-	5.5.1, 5.5.2
Mild detergent	-	5.5.1, 5.5.2
Shop vacuum cleaner	-	5.5.2
Oscillator	Krohn-Hite Model 4000AR	5.7
75-Watt Amplifier	Krohn-Hite Model 7500	5.7
Ratio Box (Optional - See table 5-3, part 3).	Electro Scientific Industries, Inc. - Model 73 with 2.5 V/Hz option.	5.7
Synchro/Resolver bridge	NAI - Model 540/11	5.14.1
Digital analyzing voltmeter (DAV)	NAI - Model 2250	5.14.1, 5.14.2, 5.7
Extender Frame Assembly	NAI - P/N 784014	5.14.2
Oscilloscope	Tektronix - Model 465	5.14.3, 5.14.4, 5.7
Thermal RMS Digital multimeter	Fluke - Model 8506A	5.14.3, 5.14.4, 5.7

* Equivalent material and equipment is acceptable

5.3 SCOPE OF SECTION I

This section describes the preventive maintenance (PM) procedures for the RSS.

5.4 SCHEDULE

Table 5-2 lists the schedule to perform PM.

5.5 CLEANING

Cleaning procedures consist of general cleaning of the external surfaces of the RSS including the Display panel. Specific cleaning consists of cleaning the filter element in the fan assembly and any dust accumulated within the RSS.

5.5.1 GENERAL CLEANING

Perform general cleaning as follows:

1. Remove dust on exterior surfaces of RSS with a dry, lint-free cloth. To remove stubborn areas, clean with water and mild detergent.

2. Clean the display panels with a clean cloth moistened with water.

5.5.2 SPECIFIC CLEANING

The filter element of the fan assembly should be cleaned every 500 operating hours (minimum). To accomplish specific cleaning, perform the following:

WARNING

TURN FRONT PANEL SWITCH OFF AND UNPLUG LINE CORD BEFORE PERFORMING THE PROCEDURES LISTED IN THIS SECTION.

CAUTION

THIS EQUIPMENT IS SENSITIVE TO DAMAGE BY ELECTROSTATIC DISCHARGE (ESD). ALWAYS USE ESD PRECAUTIONARY PROCEDURES WHEN HANDLING EQUIPMENT.

1. Turn power switch off and disconnect power cable.

2. Remove six screws securing top cover to sides of chassis and remove cover.

3. Remove six screws securing bottom cover to sides of chassis and remove cover.

4. With covers removed, inspect cleanliness of internal components. If cleaning is required, brush dust into vacuum cleaner nozzle with sash brush or wipe with clean cloth.

5. Vacuum filter element retainer of fan assembly using shop vacuum cleaner.

6. Remove fan, filter bracket, and filter element from rear panel by removing four screws and nuts.

7. Wash filter element in solution of water and mild detergent. Rinse filter element in clean water and allow to dry before installation.

8. Install filter element.

9. Secure fan, filter bracket, and filter to rear panel with four screws and nuts.

10. Secure bottom cover to sides of chassis with six screws.

11. Secure top cover to sides of chassis with six screws.

12. Connect power cable.

Table 5-2. PM Schedule

PM ACTION	SCHEDULE
General Cleaning (Paragraph 5.5.1)	Monthly
Specific Cleaning (Paragraph 5.5.2)	Every 500 operating hours or as required
Performance test (Paragraph 5.7)	Annually

Section II. Performance Test

5.6 SCOPE OF SECTION II

This section provides the performance test for the RSS and consists of four parts. Part one involves turning the RSS on and observing specific actions that the RSS performs during power-up, operator inputs to verify operation of the display/keyboard assembly, and a check of the interface circuitry. Part two checks that the RSS is functioning properly. Part three uses a ratio box to test the accuracy of the RSS. Part four provides procedures to test the accuracy of the RSS if a ratio box is not available. The performance test shall be performed as scheduled (table 5-2) or whenever the performance or accuracy of the RSS is questionable.

Note

If the performance test fails or cannot be run, refer to Section III, Fault Isolation.

5.7 PERFORMANCE TEST

Figure 5-1 is a flow chart that shows how the performance test is organized. To run the performance test, see tables 5-1 and 5-3 and perform the following:

Table 5-3. Performance Test

(Cont'd.)

ACTION	MAIN DISPLAY	VOLTAGE DISPLAY	NOTES
Part 1. Power-Up Test			
1. Connect power cable and IEEE interface cable to RSS.	-	_	-
2. Turn power switch on (I). Observe that each display panel and keyboard function LED is on, and that main display and voltage display sequence is as shown.			
	N.NN		This is the version of the system board EPROM
	111111.11	*11.1*	
	22222.222	*2.22*	
	3333.3333	*33.3*	
	444.44444	*4.44*	

Table 5-3. Performance Test

(Cont'd.)

ACTION	MAIN DISPLAY	VOLTAGE DISPLAY	NOTES
	55.555555	*55.5*	
	6.6666666	*6.66*	
	77.777777	*77.7*	
	888.88888	*8.88*	
	9999.9999	*99.9*	
3. Observe that all function LED's are off.	*00000.000*	*0.00*	
4. Observe that main display INT REF indicator is on. Main display as shown.	*SEt-UP* *INT REF*		
5. Observe that main display RES and INT REF indicators are on. Main display as shown.	*RES* *SEt-UP* *INT REF*		
6. Observe that main display RES and INT REF indicators are on. Main and voltage displays as shown.	*RES* *0.0000 DEG* *INT REF*	*0.00 V_{REF}* *400 Hz*	

Note

- **The following tests check the function of each push button**
- **Display data are shown as italic characters.**
- **Press push buttons in order listed.**

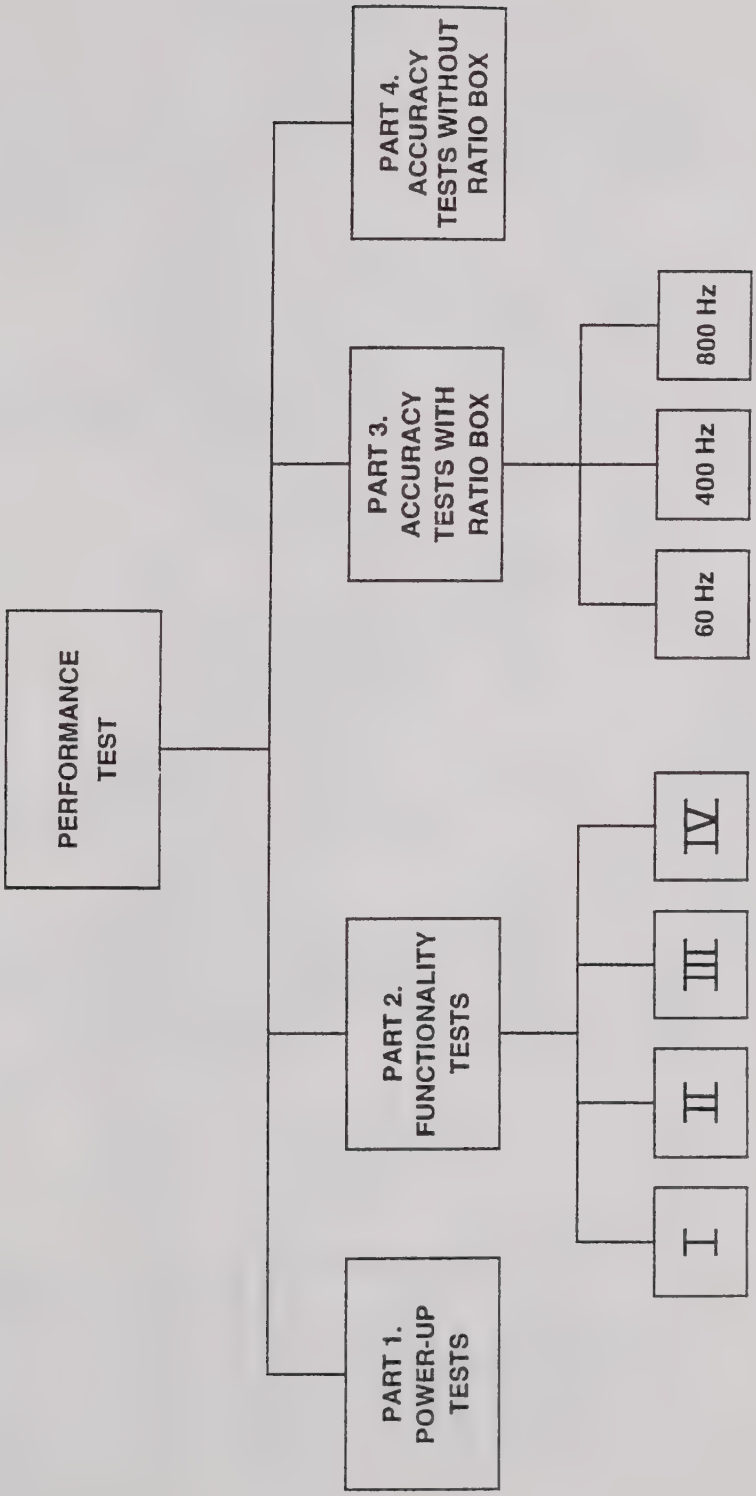

Figure 5-1. Performance Test Flow Chart (Sheet 1 of 2)

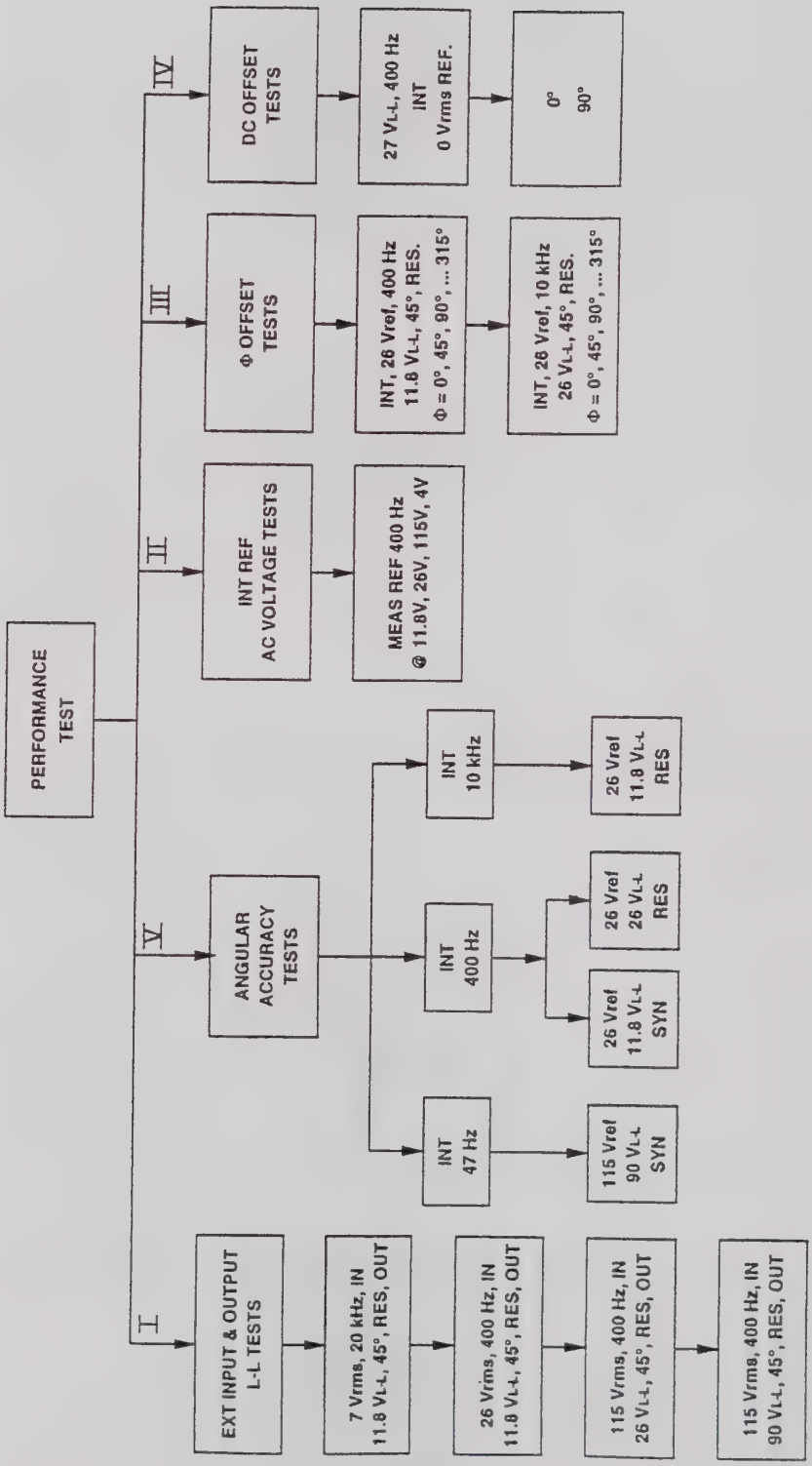

Figure 5-1. Performance Test Flow Chart (Sheet 2 of 2)

Table 5-3. Performance Test

(Cont'd.)

ACTION	MAIN DISPLAY	VOLTAGE DISPLAY	NOTES
7. Press OUTPUT ANGLE push button.	*RES* *0.0000 DEG* *INT* *REF*	*0.00 V_{REF}* *400 Hz*	OUTPUT ANGLE push button LED and INCREMENT knob LED on.
8. Rotate INCREMENT knob CW and CCW.	For CW rotation, observe that the display changes one (1) positive increment for each increment of the INCREMENT knob. For CCW rotation, observe that the display changes one (1) negative increment for each increment of the INCREMENT knob.	*0.00 V_{REF}* *400 Hz*	
9. Press UP push button.	Observe that the display increases one (1) positive increment.	No Change	
10. Press DOWN push button. Leave setting at 0.0000.	Observe that the display decreases one (1) negative increment.	No Change	
11. Press 1 2 . 3 4 5 6 7 push buttons.	*RES* *12.34567 DEG* *INT* *REF*		
12. Press CLEAR push button.	*RES* *0.0000 DEG* *INT* *REF*	No Change	

Table 5-3. Performance Test

(Cont'd.)

ACTION	MAIN DISPLAY	VOLTAGE DISPLAY	NOTES
13. Press 1 2 . 3 4 8 9 0 push buttons.	*RES* *12.34890 DEG* *INT* *REF*	No Change	
14. Press +/- push button.	*RES* *-12.34890 DEG* *INT* *REF*	*0.00 V_{REF}* *400 Hz*	
15. Press CLEAR push button.	*RES* *0.0000 DEG* *INT* *REF*	No Change	
16. Press 1 2 . 3 4 5 6 7 and ENTER push buttons.	*RES* *12.3457 DEG* *INT* *REF*	No Change	OUTPUT ANGLE push button LED and INCREMENT LED off.
17. Press OUTPUT SYN/RES push button.	*SYN* *12.3457 DEG* *INT* *REF*	No Change	OUTPUT AMPL LED off
18. Press REF INT/EXT push button.	*SYN* *12.3457 DEG* *EXT* *REF*	*0.00 V_{REF}* *0.00 Hz*	*SEt-UP* is momentarily displayed in main display.

Table 5-3. Performance Test

(Cont'd.)

ACTION	MAIN DISPLAY	VOLTAGE DISPLAY	NOTES
19. Press REF INT/EXT push button.	*SYN* *12.3457 DEG* *INT* *REF*	*0.00 V_{REF}* *400 Hz*	*SEt-UP* is momentarily displayed in main display.
20. Press REF FREQ push button	No Change	No Change	FREQ push button LED on.
21. Press REF AMPL push button.	No Change	*0.00 V_{REF}* *400 Hz*	REF AMPL push button LED on.
22. Press REF PHASE push button.	*SYN* *0.0000 DEG* *INT* *REF*	No Change	PHASE push button LED on.
23. Press MOD MODE push button repeatedly.	Observe that Sine, Triangle, Square, and Rotational indicators sequentially light.	No Change	MODE LED turns off approximately five seconds after last position selected
24. Press MOD FREQ push button.	*SYN* *0.0000 Hz* *INT* *REF*	No Change	MOD FREQ LED on.
25. Press MOD AMPL push button.	*SYN* *0.0000 DEG* *INT* *REF*	No Change	MOD AMPL LED on.
26. Press MOD VEL push	*SYN*		MOD VEL

Table 5-3. Performance Test

(Cont'd.)

ACTION	MAIN DISPLAY	VOLTAGE DISPLAY	NOTES
button.	*0.0000 °/SEC* *INT* *REF*	No Change	LED on.
27. Press MOD MODE push button.	*SYN* *12.3457 DEG* *INT* *REF*	*0.00 V_{REF}* *400 Hz*	Wait for MOD MODE push button LED to go off before proceeding to next step.
28. Press LOCAL push button.	*IEEE 6*	No Change	
29. Press UP push button repeatedly to display IEEE addresses 0 through 31. Leave setting at 6.	*IEEE 0* through *IEEE 31*	No Change	
30. Press ENTER push button.			
31. Set IEEE address to 6 on computer.			
32. Press CLEAR push button.	*SYN* *12.3457 DEG* *INT* *REF*		
33. Send *RST command to RSS from computer.	*RES* **0.0000 DEG** **REM** **INT** **REF**	*0.0 V_{L-L}* *400 Hz*	*SEt-UP* is displayed in main display for a few seconds. LISTEN flashes momentarily.

Table 5-3. Performance Test

(Cont'd.)

ACTION	MAIN DISPLAY	VOLTAGE DISPLAY	NOTES
Part 2. Functionality Tests			
1. With RSS and test equipment power off, see figure 5-2 and connect test equipment as shown.			
2. Turn test equipment outputs down and turn power on. Allow test equipment to warm-up for 15 minutes.			
3. Turn RSS power on and set RSS to 4 V_{L-L}, 45°, RES, EXT REF.	*RES* *45.0000 DEG* *EXT REF*	*4 V_{L-L}* *0.00 HZ*	
4. Adjust output of oscillator and power amplifier for 7 V_{RMS}, 1 KHZ.		*4 V_{L-L}* *1 KHZ*	
5. Connect oscilloscope and RMS multimeter to RSS terminals S1 (LO) and S3 (HI).			
6. Check for sine wave and that multimeter reading is between 2.7718 and 2.8850.			
7. Connect oscilloscope and multimeter to RSS terminals S4 (LO) and S2 (HI) and check for sine wave and that multimeter reading is between 2.7718 and 2.8850.			
8. Adjust output of oscillator and power amplifier for 26 V_{RMS}, 400 HZ.		*4 V_{L-L}* *400 HZ*	
9. Set RSS to 11.8 V_{L-L}.	*RES* *45.0000 DEG* *EXT REF*	*11.8 V_{L-L}* *400 HZ*	
10. Check for sine wave and that multimeter reading is between 8.1770 and 8.5108.			
11. Connect oscilloscope and RMS multimeter to RSS terminals S1 (LO) and S3 (HI) and check for sine wave and that multimeter reading is between 8.1770 and 8.5108.			
12. Adjust output of oscillator and power amplifier for 115 V_{RMS}, 400 HZ.			

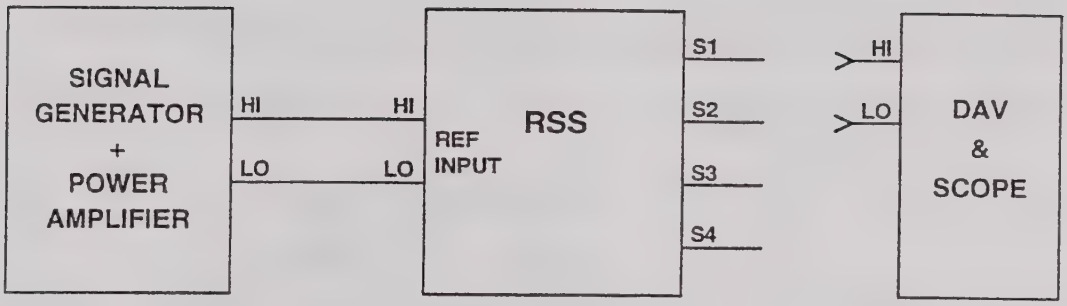

Figure 5-2. Test Setup, External Input/Output L-L Tests

Table 5-3. Performance Test

(Cont'd.)

ACTION	MAIN DISPLAY	VOLTAGE DISPLAY	NOTES
13. Set RSS to 26 V_{L-L}.	*RES* *45.0000 DEG* *EXT REF*	*26.0 V_{L-L}* *400 HZ*	
14. Check for sine wave and that multimeter reading is between 18.0171 and 18.7525. 15. Connect oscilloscope and RMS multimeter to RSS terminals S4 (LO) and S2 (HI) and check for sine wave and that multimeter reading is between 18.0171 and 18.7525.			
16. Set RSS to 90 V_{L-L}.	*RES* *45.0000 DEG* *EXT REF*	*90.0 V_{L-L}* *400 HZ*	
17. Check for sine wave and that multimeter reading is between 62.3668 and 64.9124. 18. Connect oscilloscope and RMS multimeter to RSS terminals S1 (LO) and S3 (HI) and check for sine wave and that multimeter reading is between 62.3668 and 64.9124. 19. With power off, see figure 5-3 and connect test equipment as shown.			
20. Turn power on and set RSS to 4 V_{REF}, 400 HZ, INT REF.	*RES* *0.0000 DEG* *INT REF*	*4.00 V_{REF}* *400 Hz*	
21. Check that multimeter reading is between 3.88 and 4.12.			
22. Set RSS to 11.8 V_{REF}.	*RES* *0.0000 DEG* *INT REF*	*11.8 V_{REF}* *400 Hz*	
23. Check that multimeter reading is between 11.446 and 12.154.			

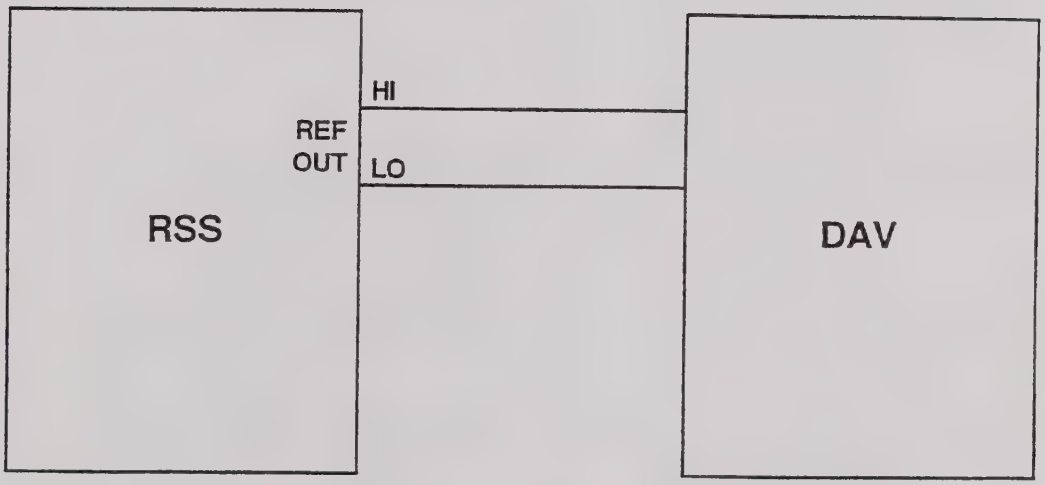

Figure 5-3. Test Setup, Internal Reference AC Voltage Tests

Table 5-3. Performance Test

(Cont'd.)

ACTION	MAIN DISPLAY	VOLTAGE DISPLAY	NOTES
24. Set RSS to 26 V_{REF}.	*RES* *0.0000 DEG* *INT* *REF*	*26 V_{REF}* *400 Hz*	
25. Check that multimeter reading is between 25.22 and 26.78.			
26. Set RSS to 115 V_{REF}.	*RES* *0.0000 DEG* *INT* *REF*	*115 V_{REF}* *400 Hz*	
27. Check that multimeter reading is between 111.55 and 118.45.			
28. With power off, see figure 5-4 and connect test equipment as shown.			
29. Turn power on and set RSS to 26 V_{REF}, 11.8 V_{L-L}, 45°, 400 HZ, Phase offset 0, RES, INT REF.	*RES* *45.0000 DEG* *INT* *REF*	*11.8 V_{L-L}* *400 Hz*	
Note: Data within brackets in following steps applies to step 55. Use unbracketed data for steps 32 through 48.			
30. Press ±180° PHASE push button on DAV and connect S1 of RSS to LO SIG terminal of DAV. Connect S3 of RSS to HI SIG terminal of DAV and check that angle displayed on DAV is between -0.5°[-5°] and 0.5°[5°].			
31. Connect S4 of RSS to LO SIG terminal of DAV. Connect S2 of RSS to HI SIG terminal of DAV and check that angle displayed on DAV is between -0.5°[-5°] and 0.5°[5°].			
32. Set RSS phase offset to 45.			

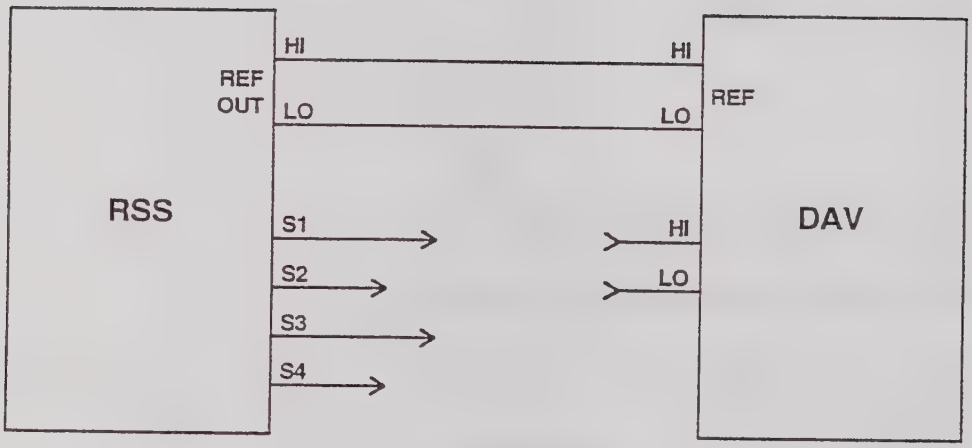

Figure 5-4. Test Setup, Phase Offset Tests

Table 5-3. Performance Test

(Cont'd.)

ACTION	MAIN DISPLAY	VOLTAGE DISPLAY	NOTES
33. Check that angle displayed on DAV is between 44.5°[40°] and 45.5°[50°].			
34. Connect S1 of RSS to LO SIG terminal of DAV. Connect S3 of RSS to HI SIG terminal of DAV and check that angle displayed on DAV is between 44.5°[40°] and 45.5°[50°].			
35. Set RSS phase offset to 90.			
36. Check that angle displayed on DAV is between 89.5°[85°] and 90.5°[95°].			
37. Connect S4 of RSS to LO SIG terminal of DAV. Connect S2 of RSS to HI SIG terminal of DAV and check that angle displayed on DAV is between 89.5°[85°] and 90.5°[95°].			
38. Set RSS phase offset to 135.			
39. Check that angle displayed on DAV is between 134.5°[130°] and 135.5°[140°].			
40. Connect S1 of RSS to LO SIG terminal of DAV. Connect S3 of RSS to HI SIG terminal of DAV and check that angle displayed on DAV is between 134.5°[130°] and 135.5°[140°].			
41. Set RSS phase offset to 180.			
42. Check that angle displayed on DAV is between 179.5°[175°] and -179.5°[-175°].			
43. Connect S4 of RSS to LO SIG terminal of DAV. Connect S2 of RSS to HI SIG terminal of DAV and check that angle displayed on DAV is between 179.5°[175°] and -179.5°[-175°].			
44. Set RSS phase offset to -45°.			
45. Check that angle displayed on DAV is between -44.5°[-40°] and -44.5°[-50°].			
46. Connect S1 of RSS to LO SIG terminal of DAV. Connect S3 of RSS to HI SIG terminal of DAV and check that angle displayed on DAV is between -44.5°[-40°] and -45.5°[-50°].			
47. Set RSS phase offset to -90°.			

Table 5-3. Performance Test

(Cont'd.)

ACTION	MAIN DISPLAY	VOLTAGE DISPLAY	NOTES
48. Check that angle displayed on DAV is between -90.5°[-95°] and -89.5°[-85°].			
49. Connect S4 of RSS to LO SIG terminal of DAV. Connect S2 of RSS to HI SIG terminal of DAV and check that angle displayed on DAV is between -90.5°[-95°] and -89.5°[-85°].			
50. Set RSS phase offset to -135°.			
51. Check that angle displayed on DAV is between -134.5° and -135.5°.			
52. Connect S1 of RSS to LO SIG terminal of DAV. Connect S3 of RSS to HI SIG terminal of DAV and check that angle displayed on DAV is between -134.5° and -135.5°.			
53. With power off, see figure 5-5 and connect test equipment as shown.			
54. Turn power on and set RSS to 27 V_{L-L}, 0 V_{REF}, 0°, 400 HZ, INT REF.	*RES* *0.0000 DEG* *INT REF*	*27 V_{L-L}* *400 Hz*	
55. Connect digital multimeter (DMM) HI and LO inputs to RSS REF OUT HI and LO terminals, respectively, and check that DMM reading is between -5 mV and +5 mV.			
56. Connect DMM HI and LO inputs to RSS S3 and S1 terminals, respectively, and check that DMM reading is between -5 mV and + 5 mV.			
57. Set RSS to 90°.	*RES* *90.0000 DEG* *INT REF*		
58. Connect DMM HI and LO inputs to RSS S2 and S4 terminals, respectively, and check that DMM reading is between -5 mV and + 5 mV.			

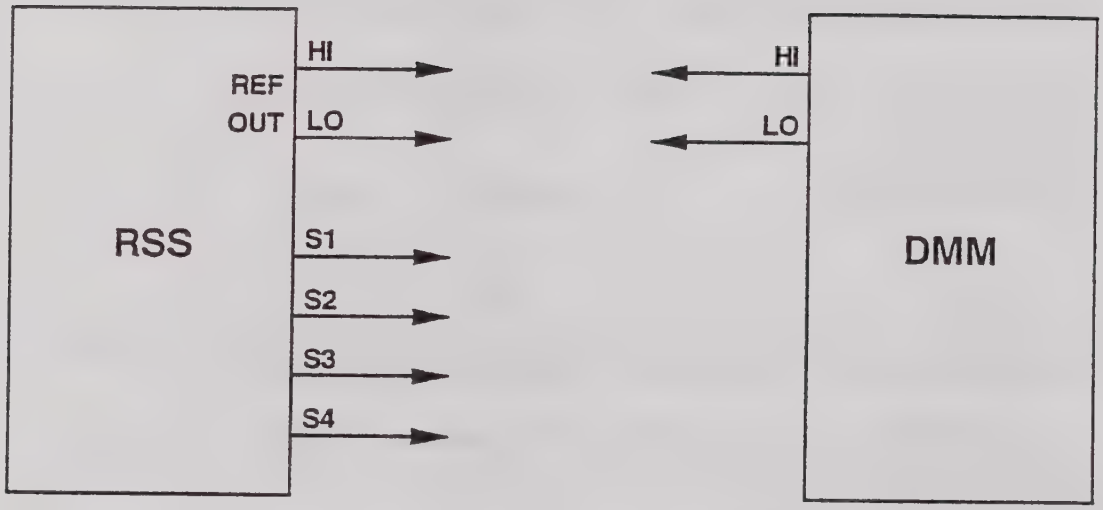

Figure 5-5. Test Setup, DC Offset Tests

Table 5-3. Performance Test

(Cont'd.)

Part 3. Accuracy Tests	
1.	With power off, see figure 5-6A and connect RSS to test equipment.
	Note: If an overload occurs (OVLD and 0.0 V_{L-L} displayed) during the following tests, wait approximately 5 seconds before resetting the L-L voltage.
2.	Turn power on and set RSS to 60 Hz, 115 V_{REF}, 90 V_{L-L}, INT REF, and SYN mode.
	Note: Calibration (CAL) is <u>not</u> permitted during an overload condition (OVLD and 0.0 V_{L-L} displayed) <u>or</u> the line-to-line voltage is set to zero.
3.	Press CAL push button. Wait for calibration to complete (approximately 12 seconds) before proceeding.
	Note: Steps 4 through 7 configure the DAV to read voltages that are in-phase with the reference.
4.	Set ratio box to 0°.
5.	Set RSS to 60°.
6.	Press PHASE ANGLE push button on DAV.
7.	Press PHASE OFFSET and ENTER push buttons on DAV.
8.	Set RSS angle and ratio box setting to first value specified for applicable test set-up in following table.
9.	.Compare DAV in-phase reading to values listed in Test Limits column of table.
10.	Repeat steps 8 and 9 for other angles listed under Test Set-Up.
11.	With power off, see figure 5-6B and connect RSS to test equipment.
12.	Repeat steps 2 - 10.
13.	With power off, see figure 5-6C and connect RSS to test equipment.
14.	Repeat steps 2 - 10.
15.	Press CLEAR VAR push button on DAV.

Table 5-3. Performance Test

(Cont'd.)

	TEST SET-UP	ANGLE	RATIO BOX SETTING	TEST LIMITS	DATA
60 HZ 115 V_{REF} 90 V_{L-L} INT REF SYN MODE	Figure 5-6A	0°	0.0000000	±1308 µV	
		22.5°	0.3859856	±1143 µV	
		45°	0.7320508	±1173 µV	
		202.5°	0.3859856	±1143 µV	
		225°	0.7320508	±1173µV	
	Figure 5-6B	67.5°	0.1412805	±1227 µV	
		90°	0.5000000	±1133 µV	
		112.5°	0.8587195	±1227 µV	
		247.5°	0.1412805	±1227 µV	
		270°	0.5000000	±1133 µV	
		292.5°	0.8587195	±1227 µV	
	Figure 5-6C	135°	0.7320508	±1173 µV	
		157.5°	0.3859856	±1143 µV	
		180°	0.0000000	±1308 µV	
		315°	0.7320508	±1173 µV	
		337.5°	0.3859856	±1143 µV	

Note: If different angles are used, see figure 5-6 for test equipment set-up and formulas to calculate new ratio box settings. See figure 5-7 and calculate new test limits.

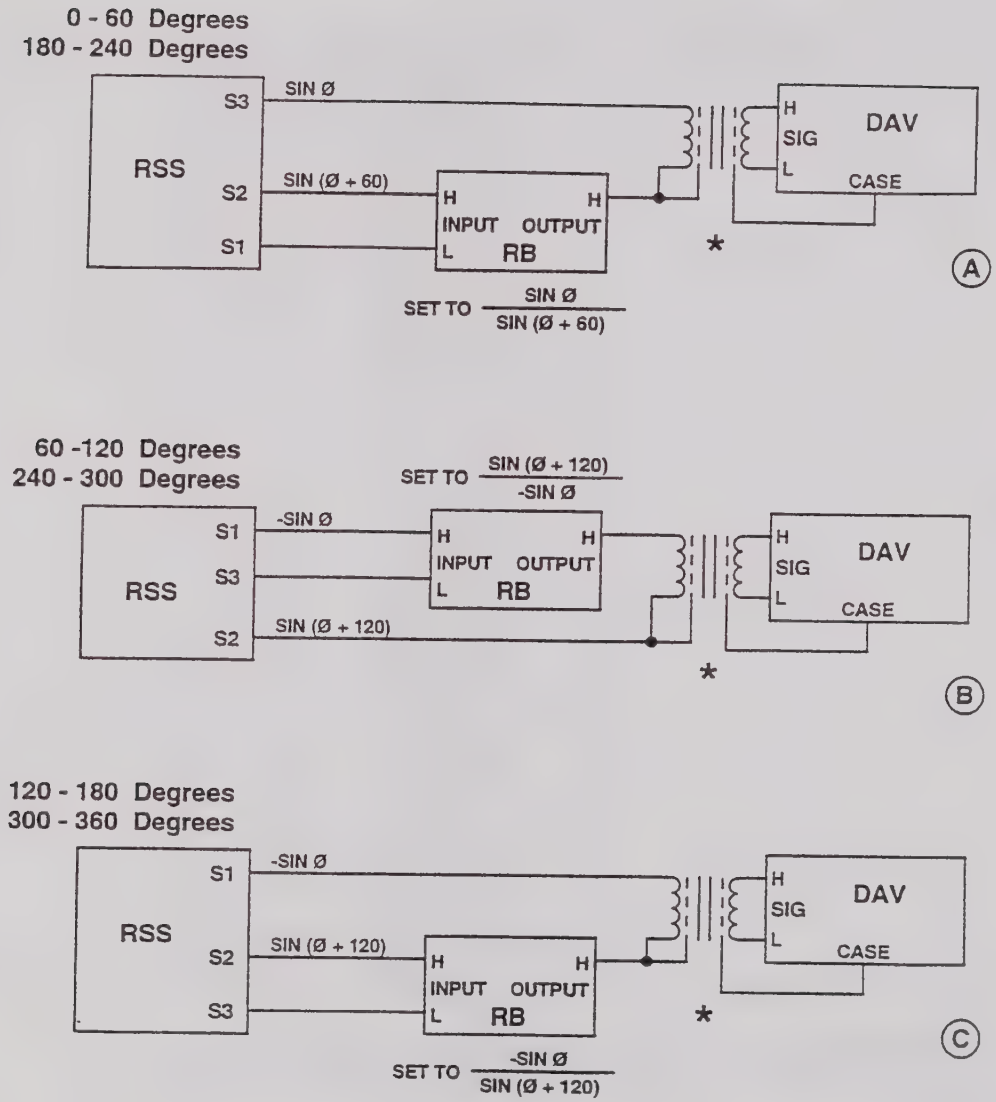

* BRIDGING TRANSFORMER AND CASE CONNECTION REQUIRED FOR FREQUENCIES ≥ 1 kHz I

Figure 5-6. Test Setup, Synchro Tests

$$\text{DAV TOLERABLE ERROR } (\mu V) = \left| \frac{\text{SIN } (\phi) \times \text{COS } (30)}{\text{SIN } (120 - \theta)} \right| \times 10^6 \times V_{L\text{-}L} \left\{ \begin{array}{c} 0 \leq \theta \leq 60 \\ 180 \leq \theta \leq 240 \end{array} \right\}$$

$$= \left| \frac{\text{SIN } (\phi) \times \text{COS } (30)}{\text{SIN } (\theta)} \right| \times 10^6 \times V_{L\text{-}L} \left\{ \begin{array}{c} 60 \leq \theta \leq 120 \\ 240 \leq \theta \leq 300 \end{array} \right\}$$

$$= \left| \frac{\text{SIN } (\phi) \times \text{COS } (30)}{\text{SIN } (60 - \theta)} \right| \times 10^6 \times V_{L\text{-}L} \left\{ \begin{array}{c} 120 \leq \theta \leq 180 \\ 300 \leq \theta \leq 360 \end{array} \right\}$$

θ = STATIC ANGLE (DEGREES)
ϕ = TOLERABLE ERROR (DEGREES)

Figure 5-7. Synchro Equations (A)

Table 5-3. Performance Test

(Cont'd.)

16.	With power off, see figure 5-6A and connect RSS to test equipment.
17.	Turn power on and set RSS to 400 Hz, 26 V_{REF}, 11.8 V_{L-L}, INT REF, and SYN mode.
18.	Press CAL push button. Wait for calibration to complete (approximately 12 seconds) before proceeding.
	Note: Steps 19 through 22 configure the DAV to read voltages that are in-phase with the reference.
19.	Set ratio box to 0°.
20.	Set RSS to 60°.
21.	Press PHASE ANGLE push button on DAV.
22.	Press PHASE OFFSET and ENTER push buttons on DAV.
23.	Set RSS angle and ratio box setting to first value specified for applicable test set-up in following table.
24.	Compare In-Phase reading of DAV to values listed in Test Limits column of table.
25.	Repeat step 23 and 24 for other angles listed under Test Set-Up.
26.	With power off, see figure 5-6B and connect RSS to test equipment.
27.	Repeat steps 17 - 25.
28.	With power off, see figure 5-6C and connect RSS to test equipment.
29.	Repeat steps 17 - 25.
30.	Press CLEAR VAR push button on DAV.

Table 5-3. Performance Test

(Cont'd.)

	TEST SET-UP	ANGLE	RATIO BOX SETTING	TEST LIMITS	DATA
400 HZ 26 V_{REF} 11.8 V_{L-L} INT REF SYN MODE	Figure 5-6A	0°	0.0000000	±113 µV	
		22.5°	0.3859856	±99 µV	
		45°	0.7320508	±102 µV	
		202.5°	0.3859856	±99 µV	
		225°	0.7320508	±102 µV	
	Figure 5-6B	67.5°	0.1412805	±106 µV	
		90°	0.5000000	±98 µV	
		112.5°	0.8587195	±106 µV	
		247.5°	0.1412805	±106 µV	
		270°	0.5000000	±98 µV	
		292.5°	0.8587195	±106 µV	
	Figure 5-6C	135°	0.7320508	±102µV	
		157.5°	0.3859856	±99 µV	
		180°	0.0000000	±113 µV	
		315°	0.7320508	±102 µV	
		337.5°	0.3859856	±99 µV	

Note: If different angles are used, see figure 5-6 for test equipment set-up and formulas to calculate new ratio box settings. See figure 5-7 and calculate new test limits.

Table 5-3. Performance Test

(Cont'd.)

31.	With power off, see figure 5-8A and connect RSS to test equipment.
32.	Turn power on and set RSS to 400 Hz, 26 V_{REF}, 26 V_{L-L}, INT REF, and RES mode.
33.	Press CAL push button. Wait for calibration to complete (approximately 12 seconds) before proceeding.
	Note: Steps 34 through 37 configure the DAV to read voltages that are in-phase with the reference.
34.	Set ratio box to 0°.
35.	Set RSS to 60°.
36.	Press PHASE ANGLE push button on DAV.
37.	Press PHASE OFFSET and ENTER push buttons on DAV.
38.	Set RSS angle and ratio box setting to first value specified for applicable test set-up in following table.
39.	Compare In-Phase reading of DAV to values listed in Test Limits column of table.
40.	Repeat steps 38 and 39 for other angles listed under Test Set-Up.
41.	With power off, see figure 5-8B and connect RSS to test equipment.
42.	Repeat steps 32 - 40.
43.	With power off, see figure 5-8C and connect RSS to test equipment.
44.	Repeat steps 32 - 40.
45.	With power off, see figure 5-8D and connect RSS to test equipment.
46.	Repeat steps 32 - 40.
47.	Press CLEAR VAR push button on DAV.

Table 5-3. Performance Test

(Cont'd.)

	TEST SET-UP	ANGLE	RATIO BOX SETTING	TEST LIMITS	DATA
400 HZ 26 V_{REF} 26 V_{L-L} INT REF RES MODE	Figure 5-8A	0°	0.0000000	±250 µV	
		22.5°	0.4142136	±270 µV	
		180°	0.0000000	±250 µV	
		202.5°	0.4142136	±270 µV	
	Figure 5-8B	45°	1.0000000	±353µV	
		67.5°	0.4142136	±270 µV	
		225°	1.0000000	±353 µV	
		247.5°	0.4142136	±270 µV	
	Figure 5-8C	90°	0.0000000	±250 µV	
		112.5°	0.4142136	±270µV	
		270°	0.0000000	±250 µV	
		292.5°	0.4142136	±270 µV	
	Figure 5-8D	135°	1.0000000	±350 µV	
		157.5°	0.4142136	±270µV	
		315°	1.0000000	±353 µV	
		337.5°	0.4142136	±270 µV	

Note: If different angles are used, see figure 5-8 for test equipment set-up and formulas to calculate new ratio box settings. See figure 5-9 and calculate new test limits.

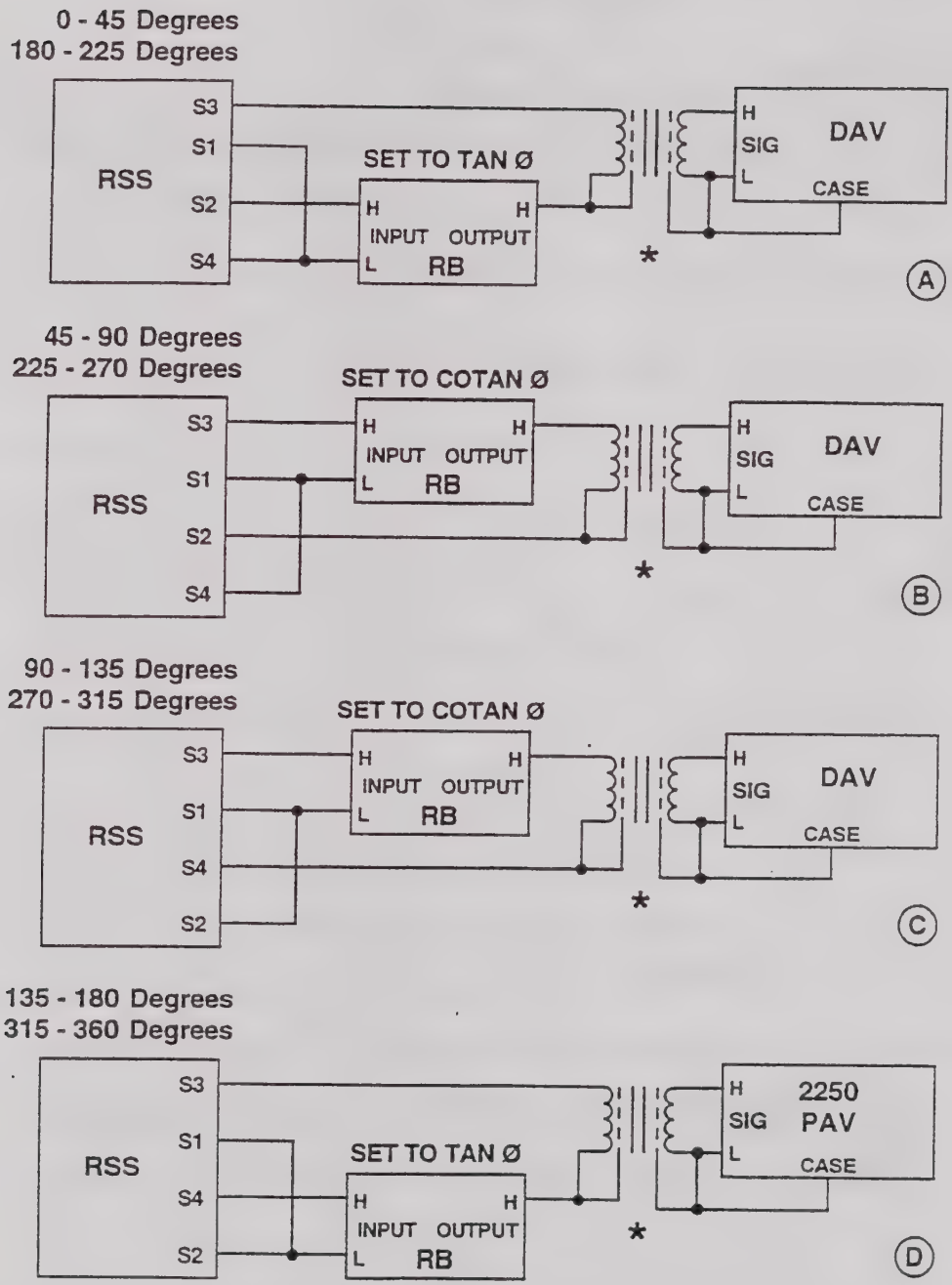

★ BRIDGING TRANSFORMER AND CASE CONNECTION REQUIRED FOR FREQUENCIES ≥ 1 KHz

Figure 5-8. Test Setup for Resolver

$$\text{DAV TOLERABLE ERROR } (\mu V) = \left\{ \begin{array}{l} \pm 10^6 \times \left| \dfrac{\text{SIN } (\phi)}{\text{COS } (\theta)} \right| \times V_{L\text{-}L} \left\{ \begin{array}{l} -45° \le \theta \le 45° \\ 135° \le \theta \le 225° \end{array} \right\} \\ \\ \pm 10^6 \times \left| \dfrac{\text{SIN } (\phi)}{\text{SIN } (\theta)} \right| \times V_{L\text{-}L} \left\{ \begin{array}{l} 45° \le \theta \le 135° \\ 225° \le \theta \le 315° \end{array} \right\} \end{array} \right\}$$

WHERE:

θ = STATIC ANGLE (DEGREES)

ϕ = TOLERABLE ERROR (DEGREES)

Figure 5-9. Resolver Equations (A)

Table 5-3. Performance Test

(Cont'd.)

48.	With power off, see figure 5-8A and connect RSS to test equipment.
49.	Turn power on and set RSS to 800 Hz, 26 V_{REF}, 11.8 V_{L-L}, INT REF, and RES mode.
50.	Press CAL push button. Wait for calibration to complete (approximately 12 seconds) before proceeding.
	Note: Steps 51 through 54 configure the DAV to read voltages that are in-phase with the reference.
51.	Set ratio box to 0°.
52.	Set RSS to 60°.
53.	Press PHASE ANGLE push button on DAV.
54.	Press PHASE OFFSET and ENTER push buttons on DAV.
55.	Set RSS angle and ratio box setting to first value specified for applicable test set-up in following table.
56.	Compare In-Phase reading of DAV to values listed in Test Limits column of table.
57.	Repeat steps 55 and 56 for other angles listed under Test Set-Up.
58.	With power off, see figure 5-8B and connect RSS to test equipment.
59.	Repeat steps 49 - 57.
60.	With power off, see figure 5-8C and connect RSS to test equipment.
61.	Repeat steps 49 - 57.
62.	With power off, see figure 5-8D and connect RSS to test equipment.
63.	Repeat steps 49 - 57.
64.	Press CLEAR VAR push button on DAV.

Table 5-3. Performance Test

(Cont'd.)

	TEST SET-UP	ANGLE	RATIO BOX SETTING	TEST LIMITS	DATA
800 HZ 26 V_{REF} 11.8 V_{L-L} INT REF RES MODE	Figure 5-8A	0°	0.0000000	±113 µV	
		22.5°	0.4142136	±123 µV	
		180°	0.0000000	±113 µV	
		202.5°	0.4142136	±123 µV	
	Figure 5-8B	45°	1.0000000	±160 µV	
		67.5°	0.4142136	±123 µV	
		225°	1.0000000	±160µV	
		247.5°	0.4142136	±160µV	
	Figure 5-8C	90°	0.0000000	±113 µV	
		112.5°	0.4142136	±123 µV	
		270°	0.0000000	±113 µV	
		292.5°	0.4142136	±123 µV	
	Figure 5-8D	135°	1.0000000	±160 µV	
		157.5°	0.4142136	±123 µV	
		315°	1.0000000	±160 µV	
		337.5°	0.4142136	±123 µV	

Note: If different angles are used, see figure 5-8 for test equipment set-up and formulas to calculate new ratio box settings. See figure 5-9 and calculate new test limits.

Table 5-3. Performance Test

(Cont'd.)

Part 4. Optional Accuracy Tests
1. With power off, see figure 5-10A and connect RSS to test equipment.
2. Turn power on and set RSS to 60 Hz, 115 V_{REF}, 90 V_{L-L}, INT REF, and SYN mode.
3. Press CAL push button. Wait for calibration to complete (approximately 12 seconds) before proceeding.
4. Set RSS angle to first angle listed in following table for applicable test set-up.
5. Compare In-Phase reading of DAV to value listed in applicable Test Limits column of table.
6. Set RSS angle to second angle listed in following table for applicable test set-up and repeat step 5.
7. With power off, see figure 5-10B and connect RSS to test equipment.
8. Repeat steps 2 - 6.
9. With power off, see figure 5-10 C and connect RSS to test equipment.
10. Repeat steps 2 - 6.
11. With power off, see figure 5-10A and connect RSS to test equipment.
12. Turn power on and set RSS to 400 Hz, 26 V_{REF}, 11.8 V_{L-L}, INT REF, and SYN mode.
13. Repeat steps 3 - 6.
14. Connect RSS to figure 5-10B and repeat steps 3-6.
15. Connect RSS to figure 5-10C and repeat steps 3-6.

Table 5-3. Performance Test

(Cont'd.)

	TEST SET-UP	ANGLE	TEST LIMITS	DATA
60 HZ 115 V_{REF} 90 V_{L-L} INT REF SYN MODE	Figure 5-10A	0°	±1308 µV	
		180°	±1308 µV	
	Figure 5-10B	120°	±1308 µV	
		300°	±1308 µV	
	Figure 5-10C	60°	±1308 µV	
		240°	±1308 µV	
400 HZ 26 V_{REF} 11.8 V_{L-L} INT REF SYN MODE	Figure 5-10A	0°	±113 µV	
		180°	±113 µV	
	Figure 5-10B	120°	±113 µV	
		300°	±113 µV	
	Figure 5-10C	60°	±113 µV	
		240°	±113 µV	

Note: If different angles are used, see figure 5-11 and calculate new test limits.

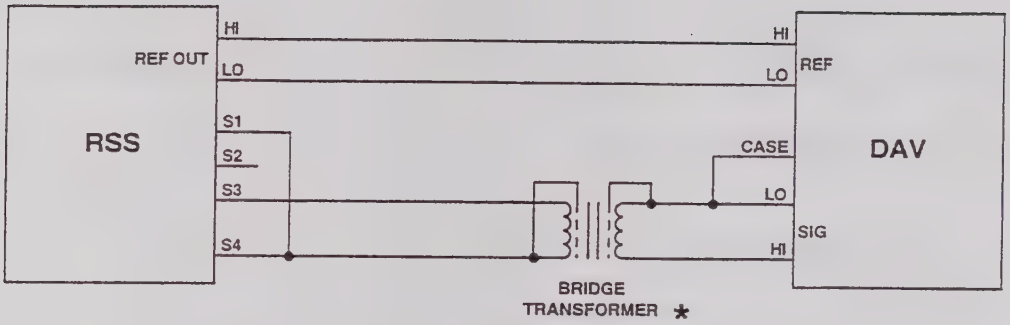

FIG 5-10A Resolver & Synchro 0° & 180°

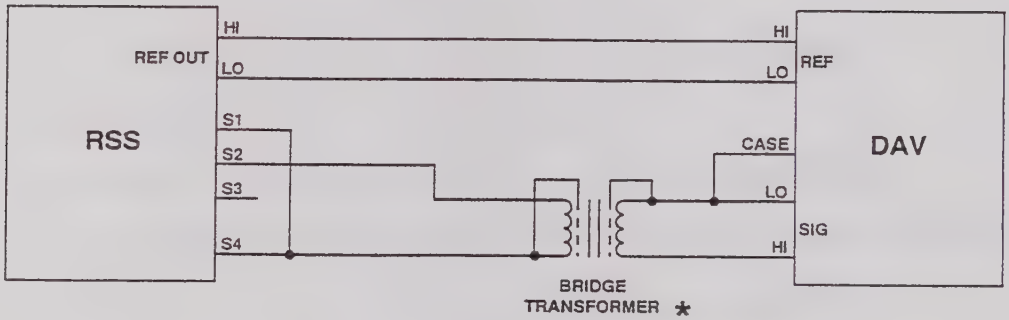

FIG 5-10B Resolver 90° & 270°
Synchro 120° & 300°

* BRIDGING TRANSFORMER AND CASE CONNECTION REQUIRED FOR FREQUENCIES ≥ 1 KHz

Figure 5-10. Test Setup, Static Angular Tests (Sheet 1 of 2)

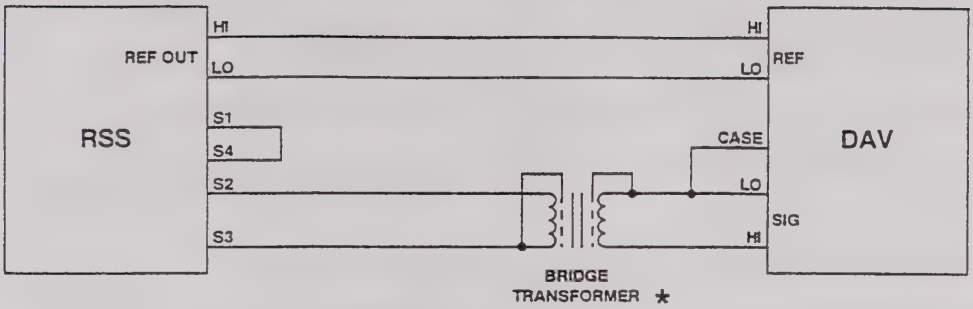

FIG 5-10C Resolver 45° & 225°
Synchro 60° & 240°

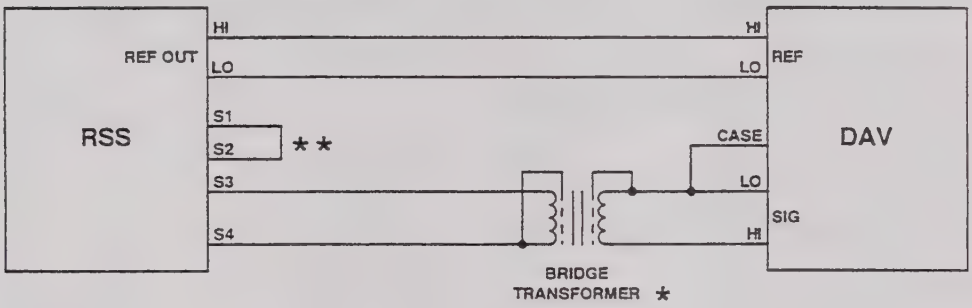

FIG 5-10D Resolver Only 135° & 315°

* BRIDGING TRANSFORMER AND CASE CONNECTION REQUIRED FOR FREQUENCIES ≥ 1 KHz

** DO NOT CONNECT SHORTING JUMPER BETWEEN S1 & S2 IN SYNCHRO MODE.

Figure 5-10. Test Setup, Static Angular Tests (Sheet 2 of 2)

Table 5-3. Performance Test

(Cont'd.)

16.	With power off, see figure 5-10A and connect RSS to test equipment.
17.	Turn power on and set RSS to 400 Hz, 26 V_{REF}, 26 V_{L-L}, INT REF, and RES mode.
18.	Press CAL push button. Wait for calibration to complete (approximately 12 seconds) before proceeding.
19.	Set RSS angle to first angle listed in following table for applicable test set-up.
20.	Compare DAV In-Phase reading to value listed in applicable Test Limits column of table.
21.	Set RSS angle to second angle listed in following table for applicable test set-up and repeat step 18.
22.	See figure 5-10B and connect RSS to test equipment.
23.	Repeat steps 18 - 21.
24.	See figure 5-10C and connect RSS to test equipment.
25.	Repeat steps 18 - 21.
26.	See figure 5-10D and connect RSS to test equipment.
27.	Repeat steps 18 - 21.
28.	With power off, see figure 5-10A and connect RSS to test equipment.
29.	Turn power on and set RSS to 800 Hz, 26 V_{REF}, 11.8 V_{L-L}, INT REF, and RES mode.
30.	Repeat steps 18 - 27.

	TEST SET-UP	ANGLE	TEST LIMITS	DATA
400 HZ 26 V_{REF} 26 V_{L-L} INT REF RES MODE	Figure 5-10A	0°	±249 µV	
		180°	±249 µV	
	Figure 5-10B	90°	±249 µV	
		270°	±249 µV	
	Figure 5-10C	45°	±355 µV	
		225°	±355 µV	
	Figure 5-10D	135°	±355 µV	
		315°	±355 µV	
800 HZ 26 V_{REF} 11.8 V_{L-L} INT REF RES MODE	Figure 5-10A	0°	±113 µV	
		180°	±113 µV	
	Figure 5-10B	90°	±113 µV	
		270°	±113 µV	
	Figure 5-10C	45°	±161 µV	
		225°	±161 µV	
	Figure 5-10D	135°	±161 µV	
		315°	±161 µV	

Note: If different angles are used, see figure 5-12 and calculate new test limits.

SYNCHRO:

1) 0°, 120°, 180° & 300°

$$\beta\ (\mu V) = \pm 17{,}460 \times V_{L\text{-}L} \times \frac{\text{SPECIFICATION ANGULAR ACCURACY (DEGREES)}}{}$$

2) 60° & 240°

$$\beta\ (\mu V) = \pm 17{,}460 \times V_{L\text{-}L} \times \frac{\text{SPECIFICATION ANGULAR ACCURACY (DEGREES)}}{}$$

β = TOLERABLE IN-PHASE VOLTAGE MEASUREMENT

Figure 5-11. Synchro Equations (B)

RESOLVER:

1) 0°, 90°, 180° & 270°

$$\beta\ (\mu V) = \pm 17{,}460 \times V_{L\text{-}L} \times \frac{\text{SPECIFICATION ANGULAR ACCURACY (DEGREES)}}{}$$

2) 45°, 135°, 225° & 315°

$$\beta\ (\mu V) = \pm 24{,}840 \times V_{L\text{-}L} \times \frac{\text{SPECIFICATION ANGULAR ACCURACY (DEGREES)}}{}$$

Figure 5-12. Resolver Equations (B)

Section III. Fault Isolation

5.8 SCOPE OF SECTION III

Table 5-4 lists fault isolation procedures for the RSS and shall be used whenever the Performance Test cannot be run, or a suspected or known failure of the RSS occurs.

IMPORTANT - READ FIRST!

Perform fault isolation in the sequence given in table 5-4 because certain conclusions are made based on previous actions and observations. Work from beginning to end of table and acknowledge or disregard each malfunction listed. Malfunctions that cannot be resolved using the suggested procedures, and any problem not covered in this table should be referred to depot or NAI factory service.

Fault Isolation for the RSS is based on an intermediate maintenance philosophy that assumes that only one failure has occurred, and that the failure can be repaired by replacement of chassis mounted SRA's or certain IC's on the system board assembly.

The table is divided into three columns. The MALFUNCTION column lists symptoms that a failure may exhibit. The PROBABLE CAUSE column recommends the most probable SRA or IC that may be causing the failure. In the case of multiple causes, the most probable cause is listed first followed by the next most probable, etc. The CORRECTIVE ACTION column refers the maintenance technician to table 5-5, Error Codes, a removal/replacement procedure in Section IV, or a test or adjustment procedure in Section V. See table 5-7 if test equipment is specified.

WARNING - DANGEROUS VOLTAGE!

DANGEROUS VOLTAGES ARE PRESENT WITHIN THE RSS. BE CAREFUL WHEN WORKING AROUND HIGH-VOLTAGE CIRCUITS. TO PREVENT ELECTRICAL SHOCK, DO NOT TOUCH THE CHASSIS WITH ANY PART OF YOUR BODY. DO NOT PERFORM THESE PROCEDURES ALONE. MAKE CERTAIN SOMEONE IS AVAILABLE TO GIVE YOU ASSISTANCE OR CALL FOR HELP.

CAUTION

THIS EQUIPMENT IS SENSITIVE TO DAMAGE BY ELECTROSTATIC DISCHARGE (ESD). ALWAYS USE ESD PRECAUTIONARY PROCEDURES WHEN HANDLING EQUIPMENT.

Table 5-4. Fault Isolation

(Cont'd.)

MALFUNCTION	PROBABLE CAUSE	CORRECTIVE ACTION
1. No response from RSS when power switch turned on (both displays dark, fan not working, etc.)	1. Power cord plug pulled out of RSS power entry module connector	Connect power cord plug to RSS power entry module connector
	2. RSS not connected to power source	Connect RSS to ac power source
2. RSS power entry module fuse blows when power turned on	1. Voltage select switch on power entry module incorrectly set	Check that voltage select switch on power entry module is correctly set (paragraph 2.4)
	2. Main power supply assembly A4 input rectifier shorted	Replace main power supply assembly A4 (paragraph 5.11.9).
	3. Fan assembly shorted internally or to chassis	Unplug fan connector from harness and check that resistance between fan connector pins is greater than 200 ohms, and that resistance from each pin to chassis is greater than 10 megohms. Replace fan (paragraph 5.11.13) if resistance in either check is out of range.
	4. Main power transformer T1 shorted	Unplug main transformer T1 connector P2 from main power supply assembly and check resistance of all transformer pins to chassis. Replace main transformer T1 (paragraph 5.11.10) if resistance is less than 10 megohms.
	5. Varistor shorted on Power entry module assembly	Replace power entry module assembly (paragraph 5.11.11)

Table 5-4. Fault Isolation

(Cont'd.)

MALFUNCTION	PROBABLE CAUSE	CORRECTIVE ACTION
3. Status of main power supply not determined. You must verify before proceeding to next step in table.	-	Perform power supply checks (paragraph 5.14.3, 5.14.4).
4. No outputs from main power supply	Main power transformer T1	Replace T1 (paragraph 5.11.10)
5. One or more outputs missing or out of range from main power supply	Main power supply	Replace main power supply assembly A4 (paragraph 5.11.9)
6. No outputs from either isolated power supply	1. Isolated power transformer T2	Replace T2 (paragraph 5.11.8)
	2. Main power supply	Replace main power supply assembly A4 (paragraph 5.11.9)
7. One or more outputs missing or out of range from isolated power supply	Isolated power supply	Replace isolated power supply assembly (paragraph 5.11.6)
8. Fan running but no response from RSS (both displays dark).	1. Microprocessor chip on system board A1	Replace U34 on system board A1 (paragraph 5.11.15)
	2. EPROM chips on system board A1	Replace U21, U22 on system board A1 (paragraph 5.11.15)
	3. System board A1	Replace system board A1 (paragraph 5.11.12)
9. All or some indicators (except °/S, DEG, and Hz) on main display panel fail performance test	1. Display FPGA chip on system board A1	Replace U29 on system board A1 (paragraph 5.11.15)
	2. Drivers Q1 - Q4 on Display assembly A5	Replace display assembly A5 (paragraph 5.11.7)
	3. System board A1	Replace system board A1 (paragraph 5.11.12).

Table 5-4. Fault Isolation

(Cont'd.)

MALFUNCTION	PROBABLE CAUSE	CORRECTIVE ACTION
10. All or some indicators on voltage numerical display (or °/S, DEG, or Hz indicator on main display panel) fail performance test	1. Display FPGA chip on system board A1	Replace U48 on system board A1 (paragraph 5.11.15)
	2. Drivers Q5 - Q8 on display assembly A5	Replace display assembly A5 (paragraph 5.11.7)
	3. System board A1	Replace system board A1 (paragraph 5.11.12).
11. Individual indicator fails performance test	1. Defective indicator	Replace display assembly A5 (paragraph 5.11.7)
	2. System board A1	Replace system board A1 (paragraph 5.11.12).
12. Unable to enter data via multiple keyboard switches as specified in performance test.	1. FPGA chip on system board A1	Replace U28 on system board A1 (paragraph 5.11.15)
	2. System board A1	Replace system board A1 (paragraph 5.11.12).
13. Individual switch fails performance test	Defective switch	Replace display assembly A5 (paragraph 5.11.7)
14. Optical encoder on display assembly A5 fails performance test	1. Defective optical encoder on display assembly A5	Replace display assembly A5 (paragraph 5.11.7)
	2. FPGA chip on system board A1	Replace U28 on system board A1 (paragraph 5.11.15)
	3. System board A1	Replace system board A1 (paragraph 5.11.12).
15. IEEE Interface check fails performance test	1. Interface cable not connected to RSS rear panel.	Check that interface cable is connected to RSS rear panel connector J23.
	2. Interface cable connector pins damaged	Repair or replace interface cable
	3. System board A1	Replace system board A1 (paragraph 5.11.12).

Table 5-4. Fault Isolation

(Cont'd.)

MALFUNCTION	PROBABLE CAUSE	CORRECTIVE ACTION
SETUP	**SETUP**	**SETUP**
16. Set up (Chapter 3, section I.) RSS for 11.8 V_{L-L}, 45°, 400 Hz, RES, INT mode. Check output for following:	-	-
17. No output on REF OUTPUT or S1 - S4 front panel binding posts.	1. Analog board A3 2. System board A1	Replace analog board (paragraph 5.11.5) Replace system board (paragraph 5.11.12)
18. Output good on REF OUTPUT and S1, S3 binding posts but bad for S2, S4	1. Sine/cosine board A2 2. Iso/tapped transformer T3 3. System board	With oscilloscope, check U70-3 on sine/cosine board for 4.0 V_{P-P} sine waveform. If present, replace sine/cosine board (paragraph 5.11.4). If waveform missing, go to next probable cause. Replace iso/tapped transformer T3 (paragraph 5.11.3) Replace system board (paragraph 5.11.12)
19. Output good on REF OUTPUT and S2, S4 binding posts but bad for S1, S3	1. Sine/cosine board A2 2. Iso/tapped transformer T4 3. System board	With oscilloscope, check U68-3 on sine/cosine board for sine waveform. If present, replace sine/cosine board (paragraph 5.11.4). If waveform missing, go to next probable cause. Replace iso/tapped transformer T4 (paragraph 5.11.3) Replace system board (paragraph 5.11.12)

Table 5-4. Fault Isolation

(Cont'd.)

MALFUNCTION	PROBABLE CAUSE	CORRECTIVE ACTION
SETUP 20. Setup for EXT mode and connect oscillator to RSS REF IN binding posts. Set oscillator for 5 V_{P-P}, 400 Hz sine wave. Check outputs for following:	**SETUP** -	**SETUP**
21. No output at S1, S3 and S2, S4 front panel binding posts. If outputs present, proceed to next step.	1. Analog board A3 2. System board A1	Replace analog board (paragraph 5.11.5) Replace system board (paragraph 5.11.12)
SETUP 22. Change oscillator output to 15 V_{P-P} and repeat step 21.	**SETUP** -	**SETUP** -
SETUP 23. Change oscillator output to 90 V_{P-P} and repeat step 21.	**SETUP** -	**SETUP** -
24. Error code displayed	-	See table 5-5, Error Codes, for maintenance recommendations.

5.9 ERROR CODE MESSAGES.9 ERROR CODE MESSAGES.9 ERROR CODE MESSAGES.9 ERROR CODE MESSAGES

The RSS tests its circuits during power-up, calibration, and remote modes. If an error is detected, an error code is shown in the RSS main display or sent over the interface. See table 5-5 for a description of error code messages and a recommended action or replacement SRA or integrated circuit chip (on the system board assembly).

Note

Error codes in the 100 to 400 range are not displayed by the RSS but sent over the interface to the remote PC. These errors are defined in IEEE specification 488.2, 11.5.1.1.4, 11.5.1.1.5, 11.5.1.1.6, and 11.5.1.1.7, 6.3, respectively.

Table 5-5. Error Codes

(Cont'd.)

CODE	DESCRIPTION	PROBABLE CAUSE
100	Command Error	Syntax error was detected in RSS parser
109	Missing parameter.	Not enough parameters received for header
200	Execution error	Error detected by RSS execution control block
220	Parameter error	Program data element related error has occurred
221	Settings conflict	Program element could not be executed because of current RSS state
222	Data out of range	Value outside legal range of RSS
240	Hardware error	Program command or query could not be executed because of a hardware problem in RSS.
300	Device-specific error	Error occurred which is not a command, query, or execution.
310	System error	Perform fault isolation (table 5-4).
350	Queue overflow	An error occurred but could not be recorded because the queue was full.
400	Query error	Message exchange protocol problem.
420	Query undetermined	See IEEE-488.2, IEEE-488 6.3.2.2
500	Reference DSP PGM download error	U2, U28
501	Angle DSP PGM download error	U2, U28

Table 5-5. Error Codes

(Cont'd.)

CODE	DESCRIPTION	PROBABLE CAUSE
502	Reference DSP table download error	U4, U28
503	Angle DSP table download error	U2, U28
504	Error setting DSP mode	U2, U28
505	User disallowed for setting outputs for 15 seconds	Data re-entered too soon after overload
506	System bus error	U28
507	Error setting resolver mode	U2, U28
508	Error setting synchro mode	U2, U28
509	Error setting calibration factors	U2, U28
510	Error clearing modulation during calibration	U2, U28
511	Error setting static angle	U2, U28
512	Error connecting calibration circuits	1. Sine/cosine board 2. Analog board 3. System board
513	Initial suboptimum gain error	1. Sine/cosine board 2. Analog board 3. System board
514	Error setting calibration gain	1. Analog board 2. Sine/cosine board 3. System board
515	Error measuring voltage	1. Analog board 2. System board
516	Calibration factor 1 limit error	1. Analog board 2. Sine/cosine board 3. System board
517	Calibration factor 2 limit error	1. Analog board 2. Sine/cosine board 3. System board
518	Calibration factor 3 limit error	1. Analog board 2. Sine/cosine board 3. System board
519	Calibration AC signal error	1. Analog board 2. Sine/cosine board 3. System board

Table 5-5. Error Codes

(Cont'd.)

CODE	DESCRIPTION	PROBABLE CAUSE
520	Error disconnecting calibration circuits	1. Sine/cosine board 2. Analog board
521	RAM test failure	U28
522	ROM test failure	U28
523	EEPROM test failure	U28
524	Calibration factor 4 limit error	1. Analog board. 2. Sine/cosine board. 3. System board.
525	DSP angle query error	U2, U28
526	DSP data RAM test failure	U2, U28
527	Calibration disallowed - overload	-
528	Calibration disallowed - setup	-
529	Overload condition present	Perform fault isolation (table 5-4).
530	Internal overload failure	Perform fault isolation (table 5-4).
599	Undefined failure	Perform fault isolation (table 5-4).
FAILUrE	Hardware failure	Perform fault isolation (table 5-4).

Section IV. Corrective Maintenance

5.10 SCOPE OF SECTION IV

This section provides removal/replacement procedures for the RSS. Special tools are not necessary to perform the procedures of this section.

5.11 REMOVAL AND REPLACEMENT
5.11 REMOVAL AND REPLACEMENT
5.11 REMOVAL AND REPLACEMENT
5.11 REMOVAL AND REPLACEMENT

Unless otherwise indicated, replacement procedures are the reverse of removal procedures. See figure 5-13 for SRA location.

WARNING - DANGEROUS VOLTAGE!

TURN FRONT PANEL SWITCH OFF AND UNPLUG LINE CORD BEFORE PERFORMING THE PROCEDURES LISTED IN THIS SECTION.

CAUTION

THIS EQUIPMENT IS SENSITIVE TO DAMAGE BY ELECTROSTATIC DISCHARGE (ESD). USE ESD PRECAUTIONARY PROCEDURES WHEN HANDLING EQUIPMENT.

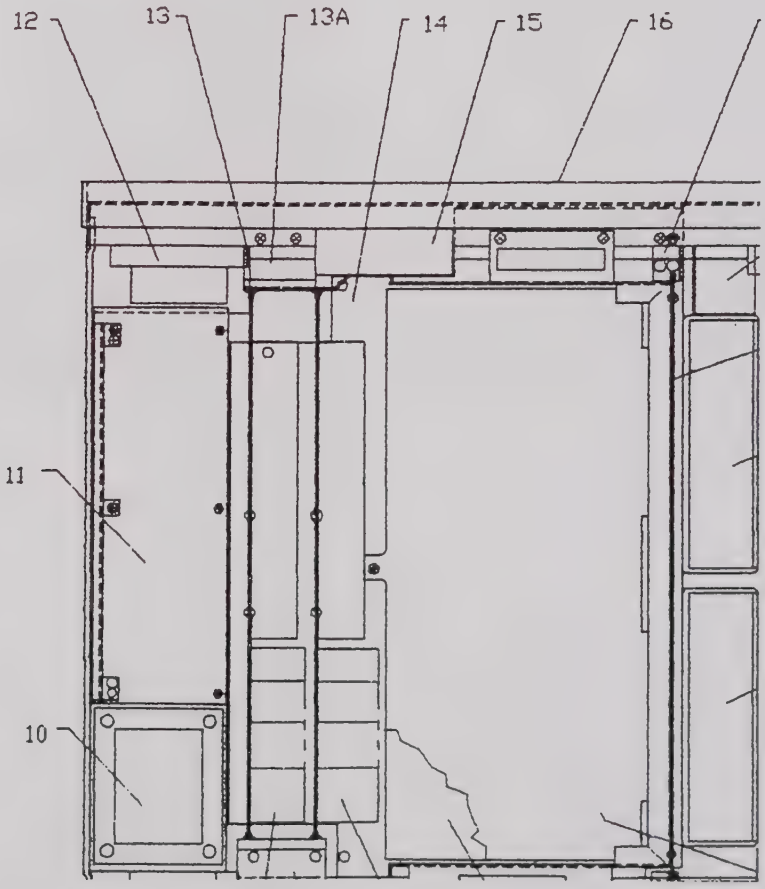

Figure 5-13. SRA Location

5.11.1 **CALIBRATION BRIDGE TRANSFORMER ASSEMBLY**

To replace the calibration bridge transformer assembly (1, figure 5-13), perform the following:

1. Remove six screws securing top cover to sides of chassis.

2. Unplug calibration bridge transformer assembly connector J1 on interconnect board assembly.

3. Remove rear panel (paragraph 5.11.10, steps 4 - 7) and pull away from chassis to allow removal of calibration bridge transformer assembly .

4. Remove four screws and lock washers securing calibration bridge transformer assembly to rear panel.

5.11.2 **INTERCONNECT BOARD ASSEMBLY**

To replace the interconnect board assembly (2, figure 5-13), perform the following:

1. Remove six screws securing top cover to sides of chassis.

2. Remove six screws securing bottom cover to sides of chassis.

3. Remove two screws securing card file to bottom of chassis.

4. Remove screw located in tab on sine/cosine board assembly.

5. Unplug connectors J1, J2, J3, J4, and J5 on interconnect board assembly .

6. Remove four screws securing card file to top of chassis and remove card file from chassis using ejectors on interconnect board.

7. Remove sine/cosine and analog board assemblies (paragraph 5.11.4, 5.11.5).

8. Remove eight screws securing interconnect board assembly to card file and remove interconnect board assembly from card file.

5.11.3 **ISOLATION/TAPPED TRANSFORMER ASSEMBLY**

To replace either isolation/tapped transformer assembly (3, 4, figure 5-13), perform the following (NOTE STEP 7):

1. Remove six screws securing top cover to sides of chassis.

2. Remove six screws securing bottom cover to sides of chassis.

3. Remove six screws securing right side cover to chassis.

4. Unplug isolation/tapped transformer assembly connectors on interconnect board assembly.

5. Unplug Faston connector from sine/cosine board assembly.

6. Remove four screws securing isolation/tapped transformer assembly to chassis.

7. If isolation/tapped transformer T3 replaced, perform sine/cosine board and analog board adjustment procedures (paragraph 5.14.1 and 5.14.2, respectively). If T4 replaced, perform sine/cosine procedure only.

5.11.4 **SINE/COSINE BOARD ASSEMBLY**

To replace the sine/cosine board assembly (5, figure 5-13), perform the following:

1. Remove card file assembly, paragraph 5.11.2, steps 1 through 6.

2. Operate eject levers and remove sine/cosine board assembly from card file.

3. Install replacement sine/cosine board assembly. Perform sine/cosine board assembly

adjustment procedure (paragraph 5.14.1).

5.11.5. ANALOG BOARD ASSEMBLY

To replace the analog board assembly (6, figure 5-13), perform the following:

1. Remove card file assembly, paragraph 5.11.2, steps 1 through 6.

2. Operate eject levers and remove analog board assembly from card file.

3. Install replacement analog board assembly. Perform analog board assembly adjustment procedure (paragraph 5.14.2)

5.11.6 ISOLATED POWER SUPPLY

To replace an isolated power supply (7, 8, figure 5-13), perform the following:

1. Remove six screws securing top cover to sides of chassis.

2. Lift ejector tabs on isolated power supply and remove from system board assembly connector J4 or J5.

5.11.7 DISPLAY/KEYBOARD ASSEMBLY

To replace the display/keyboard assembly (9, figure 5-13), perform the following:

1. Remove six screws securing top cover to sides of chassis.

2. Remove six screws securing bottom cover to sides of chassis.

3. Remove screws (total 12) securing right and left side cover to chassis and remove covers.

4. Remove six screws on sides of front panel securing front panel to chassis.

5. Remove screws securing bottom flange of panel to chassis.

6. Remove four screws (5A, figure 5-13) securing card file guide bar from top and bottom of front panel.

7. Remove two screws (7A, figure 5-13) securing isolated power supply assembly guide bracket from top of rear panel.

8. Remove any wire retaining device as required and lay panel flat to gain access to display/keyboard assembly.

CAUTION

GRASP CONNECTOR, NOT RIBBON CABLE IN FOLLOWING STEP.

9. Unplug ribbon cable connectors from display/keyboard assembly.

10. Remove nine screws and washers securing display/keyboard assembly to front panel.

5.11.8 ISOLATED POWER TRANSFORMER ASSEMBLY5.11.8 ISOLATED POWER TRANSFORMER ASSEMBLY5.11.8 ISOLATED POWER TRANSFORMER ASSEMBLY5.11.8 ISOLATED POWER TRANSFORMER ASSEMBLY

To replace the isolated power transformer assembly (10, figure 5-13), perform the following:

1. Remove six screws securing top cover to sides of chassis.

2. Unplug connectors J2 and J3 on system board assembly.

3. Unplug connector J4 on main power supply board assembly.

4. Cut ties securing harness on main power supply board assembly heat sink.

5. Remove four screws and lock washers securing isolated power transformer assembly to chassis.

5.11.9 MAIN POWER SUPPLY BOARD ASSEMBLY

To replace the main power supply board assembly (11, figure 5-13), perform the following:

1. Remove six screws securing top cover to sides of chassis.

2. Remove six screws securing bottom cover to sides of chassis.

3. Remove six screws securing left side cover

4. Remove six screws securing main power supply board assembly heat sink to side of chassis.

5. Cut two ties securing isolated power transformer assembly cable to power supply board assembly heat sink.

6. Remove isolated power supply A6 (8, figure 5-13) to facilitate performing next procedure.

CAUTION

GRASP CONNECTOR, NOT RIBBON CABLE IN FOLLOWING STEP.

6. Unplug ribbon connector J1 and connectors J2, J3, and J4 on main power supply board assembly.

7. Remove six screws and lock washers securing main power supply board assembly to chassis and remove main power supply board assembly .

8. Install replacement main power supply board assembly. Perform main power supply assembly adjustment procedure (paragraph 5.14.4).

5.11.10 MAIN TRANSFORMER ASSEMBLY

To replace the main transformer assembly (12, figure 5-13), perform the following:

1. Remove six screws securing top cover to sides of chassis.

2. Remove six screws securing bottom cover to sides of chassis.

3. Remove screws (total 12) securing right and left side cover to chassis and remove covers.

4. On right rear of RSS, remove two screws securing top of card file to rear panel.

5. Remove two screws (16A, figure 5-13) securing card file guide bar from top of rear panel.

6. Remove two screws (13A, figure 5-13) securing isolated power supply guide bracket from top of front panel.

7. Remove 11 screws securing rear panel to chassis.

8. Pull rear panel away from chassis to permit main transformer assembly removal.

9. Unplug connector J2 on main power supply board assembly.

10. Remove four nuts, lock washers and spacers securing main transformer assembly to rear panel.

5.11.11 **POWER ENTRY MODULE ASSEMBLY**

To replace the power entry module assembly (13, figure 5 -1), perform the following:

1. Remove card file with boards installed (paragraph 5-11.2, steps 1-6).

2. Remove isolated power supply assemblies (paragraph 5-11.6). Cut ties on harness going to front panel.

4. Tag and remove terminals on front panel on/off switch.

5. Unplug connector J3 on main power supply board assembly .

6. Unplug two-pin Molex connector from power entry module assembly to Fan assembly on rear panel.

7. Push in locking tabs on sides of power entry module assembly and remove power entry module assembly with attaching harness assemblies from rear panel.

5.11.12 **SYSTEM BOARD ASSEMBLY**

To replace the system board assembly (14, figure 5-13), perform the following:

1. Remove card file with boards installed (paragraph 5.11.2, steps 1-6).

2. Remove isolated power supply assemblies (paragraph 5.11.6).

3. Unplug connectors J2 and J3 on system board assembly.

4. Unplug connector J1 from main power supply board assembly.

5. Tag and remove terminals on system board assembly terminal posts J12, 1-8.

6. Unplug connector J11 from TB1 on rear panel.

7. Remove hardware securing connectors J23 and J22 (if installed) on rear panel.

CAUTION

GRASP CONNECTOR, NOT RIBBON CABLE IN FOLLOWING STEP.

8. Unplug ribbon connectors J6 and J9 on system board assembly.

9. Remove four screws securing each support.

10. Remove 15 screws securing system board assembly to chassis.

5.11.13 **FAN ASSEMBLY**

To replace the fan assembly (15, figure 5-13), perform the following:

1. Remove six screws securing top cover to sides of chassis.

2. Remove six screws securing bottom cover to sides of chassis.

3. Remove rear panel assembly (paragraph 5.11.10, steps 4 - 7).

4. Unplug fan from harness connector.

5. Remove four screws and nuts securing fan, filter bracket, and filter to chassis.

Note

Clean filter element if necessary before reassembly (paragraph 5.5.2).

5.11.14 **TERMINAL BLOCK**

To replace the terminal block (16, figure 5-13), perform the following:

1. Remove six screws securing top cover to sides of chassis.

2. Remove six screws securing bottom cover to sides of chassis.

3. Remove four screws securing terminal block mounting plate to rear panel.

4. Pull terminal block away from rear panel to expose wiring to terminal block.

5. Tag wiring and remove solder attaching wiring to terminals.

6. Remove four threaded spacers securing terminal block to mounting plate.

5.11.15 **SYSTEM BOARD INTEGRATED CIRCUIT REMOVAL/REPLACEMENT**

The system board contains eight integrated circuit (IC) chips mounted in sockets. When removing or installing these chips, see table 5-6 to select the proper tool. IC location is shown in figure 6-2, Chapter 6. To access IC's on the system board assembly, remove six screws securing bottom cover to sides of chassis and remove cover.

5.11.16 **EXTENDER FRAME ASSEMBLY INSTALLATION**

To install the extender frame assembly (not illustrated), perform the following:

1. Remove card file assembly (paragraph 5.11.2, steps 1 - 6).

2. Position extender frame such that connector faces outside RSS and carefully install extender frame assembly into system board connectors.

3. Attach extender frame assembly to chassis with three screws, lock washers, and flat washers.

4. Plug entire card file assembly with boards

into extender frame assembly.

5. Connect wiring and connectors previously removed.

5.11.17 **FUSE REPLACEMENT**

1. Place on/off switch to off (O) position.

2. Disconnect line cord from RSS.

3. Using a flat screwdriver blade, pry open the fuse guard cover on power entry module to expose fuse.

4. Replace existing fuse with appropriate size fuse (115V = 2 A slo lo; 230V = 1 A slo-blo).

5 . Close fuse guard cover.

Table 5-6. IC Insertion/Extraction Tools

IC REFERENCE DESIGNATION	TOOL PART NO.
U2, U4	AMP/822253-2
U28, U29, U34, U48	MES/291
U21, U22	OK/Model EX-2

Section V. Testing and Adjustment

5.12 SCOPE OF SECTION V

This section provides test and adjustment procedures for the sine/cosine board assembly, analog board assembly, isolated power supply assemblies, and the main power supply board assembly. These procedures shall be used when installing a new assembly following a maintenance action, or whenever it is desired to verify the function of the assembly.

WARNING - DANGEROUS VOLTAGE!

DANGEROUS VOLTAGES ARE PRESENT WITHIN THE RSS. BE CAREFUL WHEN WORKING AROUND HIGH-VOLTAGE CIRCUITS. TO PREVENT ELECTRICAL SHOCK, DO NOT TOUCH THE CHASSIS WITH ANY PART OF YOUR BODY. DO NOT PERFORM THESE PROCEDURES ALONE. MAKE CERTAIN SOMEONE IS AVAILABLE TO GIVE YOU ASSISTANCE OR CALL FOR HELP.

CAUTION

THIS EQUIPMENT IS SENSITIVE TO DAMAGE BY ELECTROSTATIC DISCHARGE (ESD). ALWAYS USE ESD PRECAUTIONARY PROCEDURES WHEN HANDLING EQUIPMENT.

5.13 TOOLS AND TEST EQUIPMENT

Table 5-7 lists the special material and test equipment required to perform the test and adjustment procedures in this section.

Note

Equivalent material and equipment is acceptable.

Table 5-7. Special Material and Test Equipment

DESCRIPTION	MANUFACTURER/MODEL	REF. PARAGRAPH
Digital analyzing voltmeter (DAV)	NAI - Model 2250	5.14.1, 5.14.2
Oscilloscope	Tektronix - Model 456	5.14.3, 5.14.4
Synchro/Resolver bridge	NAI - Model 540/11	5.14.1
Extender Frame Assembly	NAI - P/N 784014	5.14.2
Digital multimeter	Fluke - Model 8506	5.14.3, 5.14.4

5.14 TEST AND ADJUSTMENT PROCEDURES

Perform the following procedures to test and adjust the RSS shop replaceable assemblies (SRA).

Note

When set-up is specified in this section, refer to Chapter 3, Section I, for set-up procedures.

5.14.1 SINE/COSINE BOARD ADJUSTMENT

WARNING

DANGEROUS VOLTAGES PRESENT! USE EXTREME CARE WHEN PERFORMING THIS PROCEDURE.

To adjust the sine/cosine board assembly, perform the following:

1. Turn on all test equipment and allow RSS and test equipment to warm up for at least 20 minutes. Do not calibrate RSS.

2. Set θ angle to 45° (refer to Chapter 3, Operation), both RSS reference amplitude and $V_{L\text{-}L}$ voltage to 26 volts, internal frequency to 15000 Hz.

3. Connect RSS output S2 and S3 to the DAV SIG HI and LO inputs, respectively.

4. Connect a shorting jumper between RSS S1 and S4 front panel binding posts.

5. Connect RSS REF OUT HI and LO outputs to DAV REF HI and LO inputs, respectively.

6. Offset the RSS angle to obtain as close to an *in-phase* reading of 0.0000 on the DAV as possible. (If desired, use the RSS INCREMENT knob.)

7. Adjust R47 for 0.0000 ± 100 μV of *quadrature* on the DAV.

8. Set RSS to 11.8 $V_{L\text{-}L}$, 400 HZ, resolver, and an angle of 86.4166°.

9. Connect RSS S1 through S4 outputs to bridge input.

10. Connect bridge output to DAV SIG channel. (DAV set to read in-phase).

11. Set RSS to 86.4166°.

12. Set bridge for 86.4166° and record in-phase error.

13. Set bridge and RSS to 86.4167°.

14. Adjust R63 for same reading recorded in step 10.

Note

If desired, use the RSS INCREMENT knob to alternate between angles to check adjustment.

15. Set RSS to 3.5834°.

16. Set the bridge to 3.5834° and record the in-phase error.

17. Set RSS to 3.5833°.

18. Set bridge to 3.5833.

19. Adjust R52 for same reading recorded in step 15.

5.14.2 ANALOG BOARD ADJUSTMENT
.14.2 ANALOG BOARD ADJUSTMENT
.14.2 ANALOG BOARD ADJUSTMENT
.14.2 ANALOG BOARD ADJUSTMENT

WARNING

DANGEROUS VOLTAGES PRESENT! USE EXTREME CARE WHEN PERFORMING THIS PROCEDURE.

To adjust the analog board assembly, perform the following:

1. With RSS power off, install extender frame assembly (paragraph 5.11.16).

2. Place analog board in extender frame and connect wiring and connectors previously removed.

3. Turn on all external test equipment and allow to warm up for 20 minutes.

4. Connect RSS output S2 and S4 to the DAV SIG HI and LO inputs, respectively.

5. Connect RSS REF OUT HI and LO outputs to DAV REF HI and LO inputs, respectively.

6. Set θ angle to 45° (refer to Chapter 3,

Operation), V_{REF} to 26 volts, V_{L-L} to 11.8 volts, internal frequency to 15000 Hz.

CHANGE 3

7. Adjust R76 for 0.46 degrees.

5.14.3 ISOLATED POWER SUPPLY VOLTAGE CHECK

To test the isolated power supply assembly, perform the following:

WARNING

DANGEROUS VOLTAGES PRESENT! USE EXTREME CARE WHEN PERFORMING THIS PROCEDURE.

1. Install isolated power supply (paragraph 5.11.6) into RSS.

2. Turn power on/off switch on (I).

3. See figure 5-14 and use a digital multimeter set to DC and an AC coupled oscilloscope to check outputs listed in table 5-8:

Table 5-8. Isolated Power Supply Voltage Checks

OUTPUT	MEAS. POINT	VOLTAGE RANGE	AC RIPPLE *
REF GND	TP1	-	-
+15	U1, Pin 2	14.2 to 16.0	5 mV_{P-P}
-15	U2, Pin 3	-14.2 to -16.0	5 mV_{P-P}
+20	U9, Pin 2	19.6 to 21.9	5 mV_{P-P}
-20	U10, Pin 3	-19.6 to -21.9	5 mV_{P-P}
+48	U9, Pin 3	45.5 to 49.8	10 mV_{P-P}
-48	U10, Pin 2	-45.5 to -49.8	10 mV_{P-P}
+150	Q1, Pin 1	147 to 164	15 mV_{P-P}
-150	Q2, Pin 1	-147 to -164	15 mV_{P-P}

* Maximum

5.14.4 MAIN POWER SUPPLY BOARD ASSEMBLY VOLTAGE CHECK AND ADJUSTMENT

To check and adjust the main power supply board assembly, perform the following:

WARNING

DANGEROUS VOLTAGES PRESENT! USE EXTREME CARE WHEN PERFORMING THIS PROCEDURE.

1. Install main power supply board assembly (paragraph 5.11.9) in RSS.

2. Turn power on/off switch on (I).

3. See figure 5-15 and use a digital multimeter set to DC and an AC coupled oscilloscope to check the following outputs listed in table 5-9:

Table 5-9. Initial Main Power Supply Voltage Checks

OUTPUT	MEAS. POINT	VOLTAGE RANGE	AC RIPPLE *
REF GND	TP4	-	-
+5 Vdc	TP3	5.1 to 5.4 Vdc	5 mV_{P-P}
+15 Vdc	TP1	14.2 to 16.0 Vdc	5 mV_{P-P}
-15 Vdc	TP2	-14.2 to -16.0 Vdc	5 mV_{P-P}
+48 Vdc	TP5	45.5 to 49.8 Vdc	10 mV_{P-P}
-48 Vdc	TP6	-45.5 to -49.8 Vdc	10 mV_{P-P}

* Maximum

4. Set digital multimeter to DC and connect to TP7 (+175V output).

5. Adjust R17 until 174 Vdc is displayed by digital multimeter.

6. Set digital multimeter to DC and connect to TP8 (-175V output).

7. Adjust R16 until -174 Vdc is displayed by digital multimeter.

8. After RSS has warmed up for at least 10 minutes, see figure 5-15 and use a digital multimeter set to DC and a AC coupled oscilloscope to check that the outputs listed in table 5-10 are within tolerance.

Table 5-10. Final Voltage Checks

OUTPUT	MEAS. POINT	VOLTAGE RANGE	AC RIPPLE *
REF GND	TP4	-	-
+175 Vdc	TP7	173.6 to 174.4 Vdc	15 mV_{P-P}
-175 Vdc	TP8	-173.6 to -174.4 Vdc	15 mV_{P-P}

* Maximum

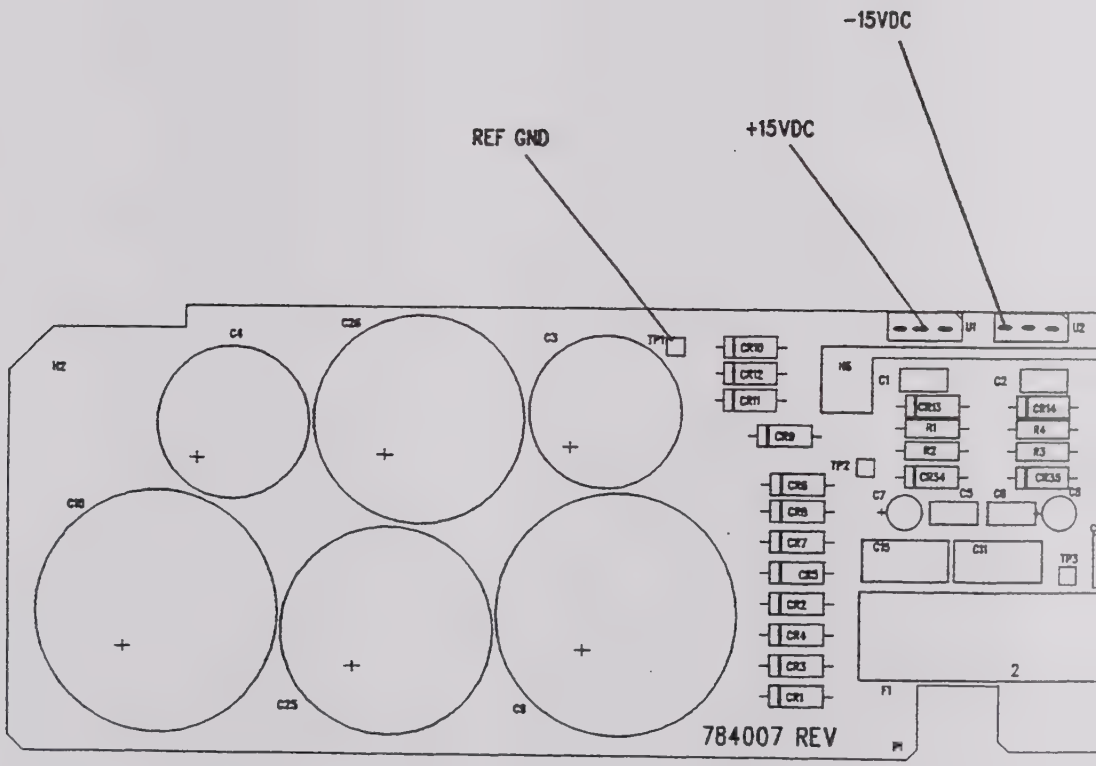
-15VDC
+15VDC
REF GND
784007 REV

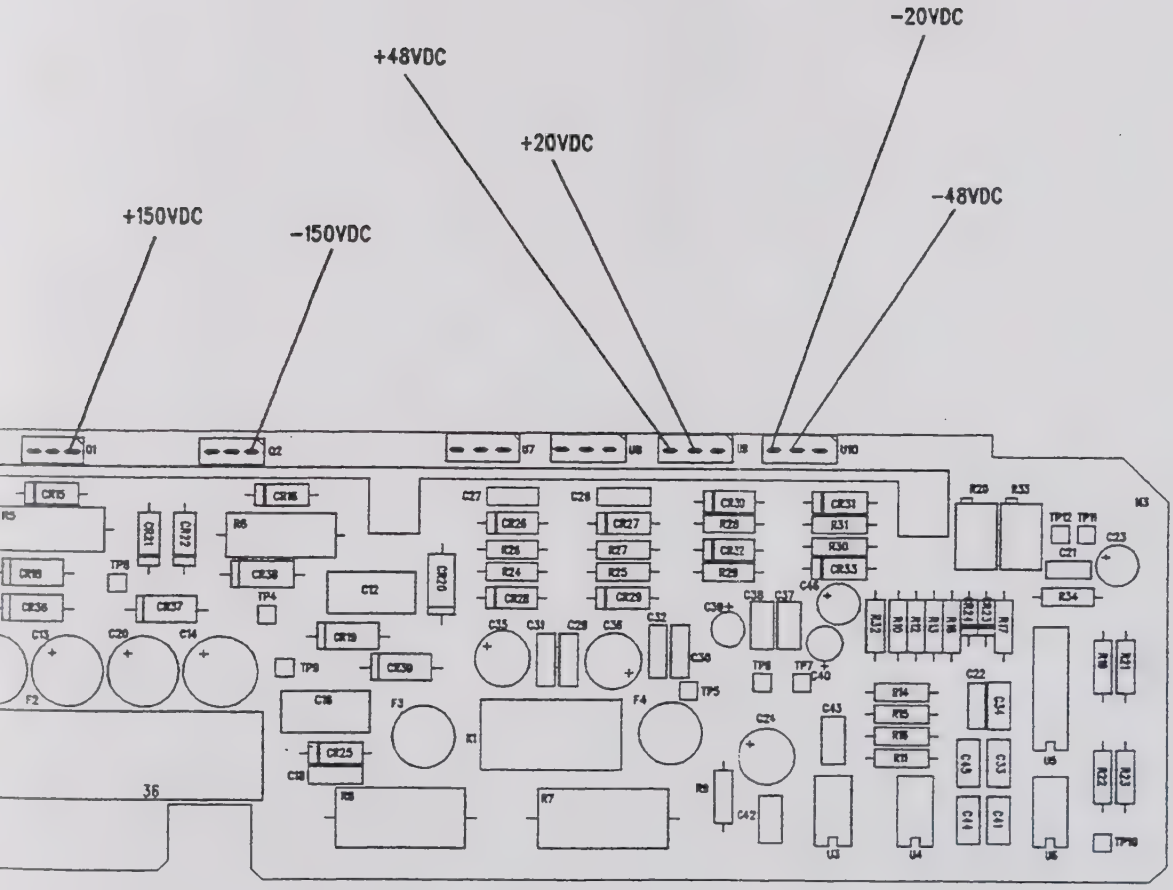

Figure 5-14. Voltage Measurement Points, Isolated P.S.

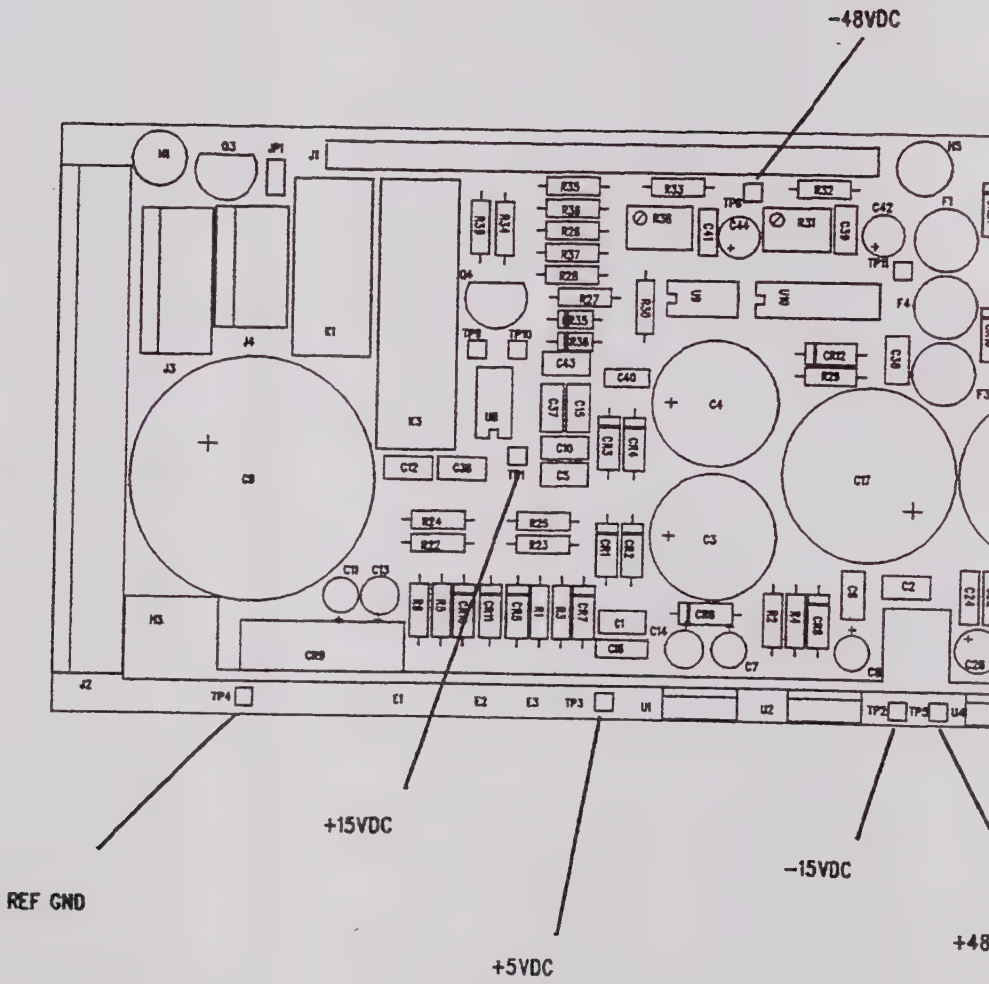
-48VDC
+15VDC
-15VDC
REF GND
+5VDC
+48

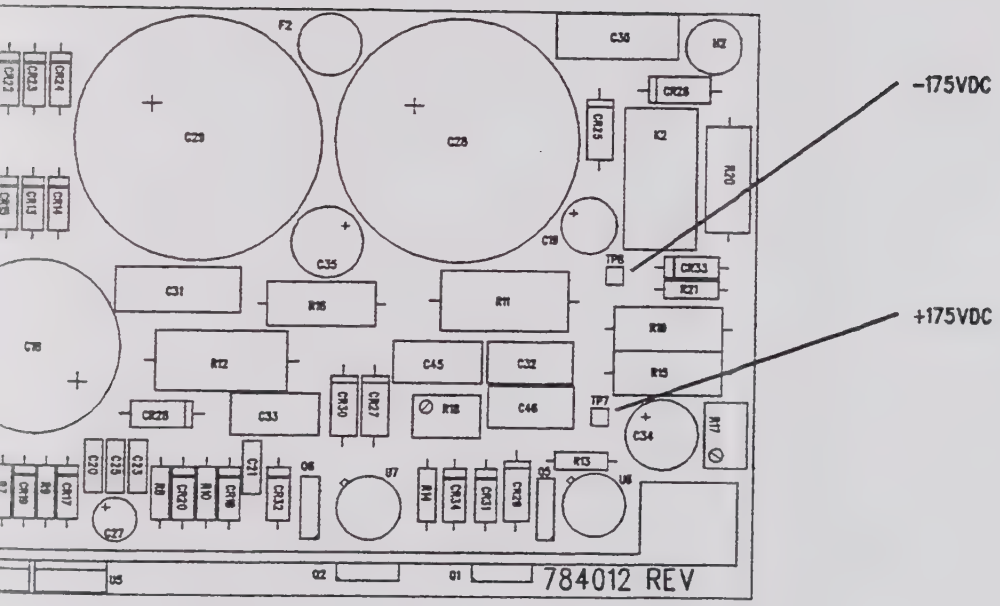

Figure 5-15. Voltage Measurement Points, Main P.S.

CHAPTER 6
PARTS LIST

6.1 GENERAL

This chapter contains illustrations (figures 6-1 through 6-8) to locate replaceable parts used on the Resolver/Synchro Standard (RSS). The part lists for each illustration (table 6-1 through 6-8) contain reference designation (ref des), description/vendor part number, North Atlantic Instruments (NAI) part number, and quantity.

6.2 PARTS LIST

The parts list contains only replaceable parts for the RSS. Hardware, covers, panels, and other sheet metal parts are not listed. If parts of this type are required, contact NAI for assistance and pricing.

The parts list is prepared in a tabular format divided into four columns as follows:

6.2.1 REF DES (Reference Designation)

Provides the alphanumerical reference designations for replaceable parts shown on schematic and part location illustrations.

6.2.2 DESCRIPTION/VENDOR PART NO.

Provides a description of the replaceable part and a vendor part number, if applicable.

6.2.3 NAI P/N

Provides the NAI part number of the replaceable part.

6.2.4 QTY (Quantity)

Provides the total quantity used on the assembly.

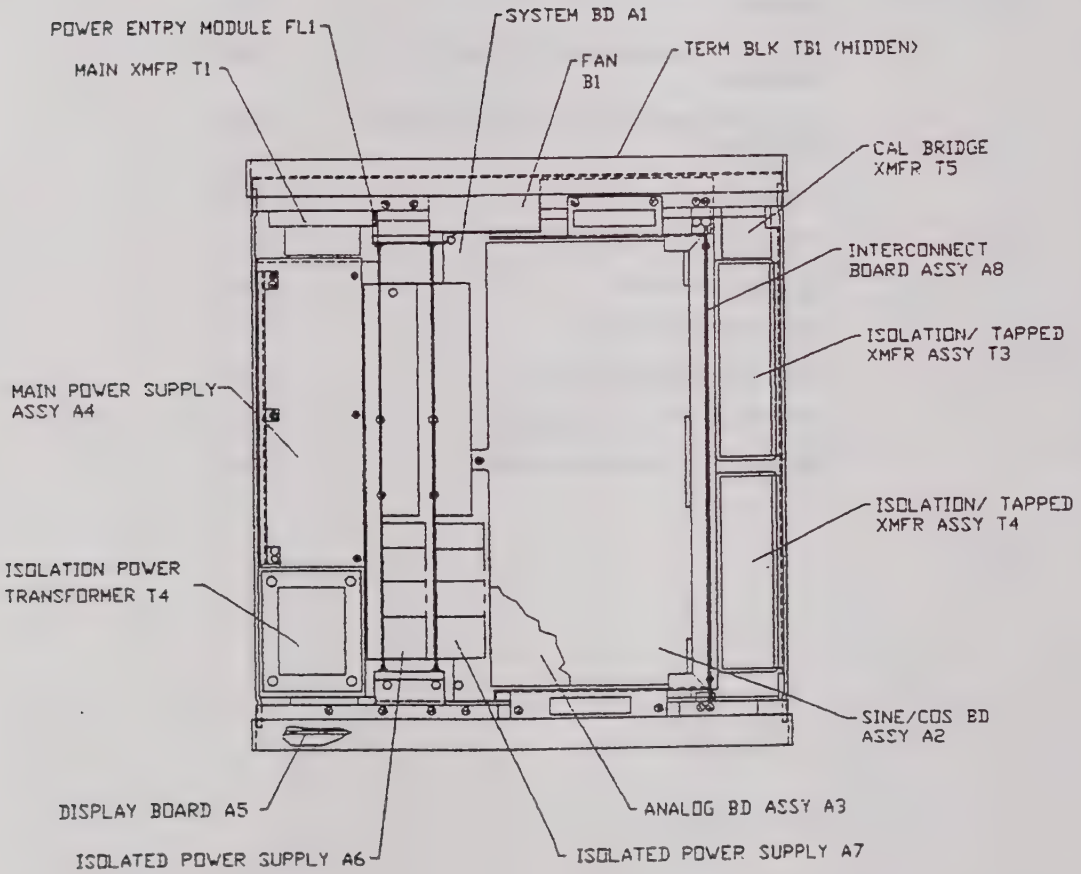

Figure 6-1. Chassis Assembly

Table 6-1. Chassis Assembly Parts

REF DES	DESCRIPTION / VENDOR PART NO.	NAI P/N	QTY
A1	System board assembly. See Table 6-2 for breakdown.	784009	1
A2	Sine/cosine board assembly. See Table 6-3 for breakdown.	784003-1	1
A3	Analog board assembly. See Table 6-4 for breakdown.	784008-1	1
A4	Main power supply board assembly. See Table 6-5 for breakdown.	784012	1
A5	Display/Keyboard assembly. See Table 6-6 for breakdown.	784006	1
A6, A7	Isolated power supply assembly. See Table 6-7 for breakdown.	784007	2
A8	Analog interconnection board assembly. See Table 6-8 for breakdown.	784011	1
B1	Fan assembly	784020	1
FL1	Power entry module assembly	784019	1
TB1	Terminal block assembly	549004	1
T1	Main transformer assembly	810117	1
T2	Isolation power transformer assembly	810104	1
T3, T4	Isolation/tapped transformer assembly	784021	2
T5	Calibration bridge transformer assembly	784018	1

ASSY 784009 REV

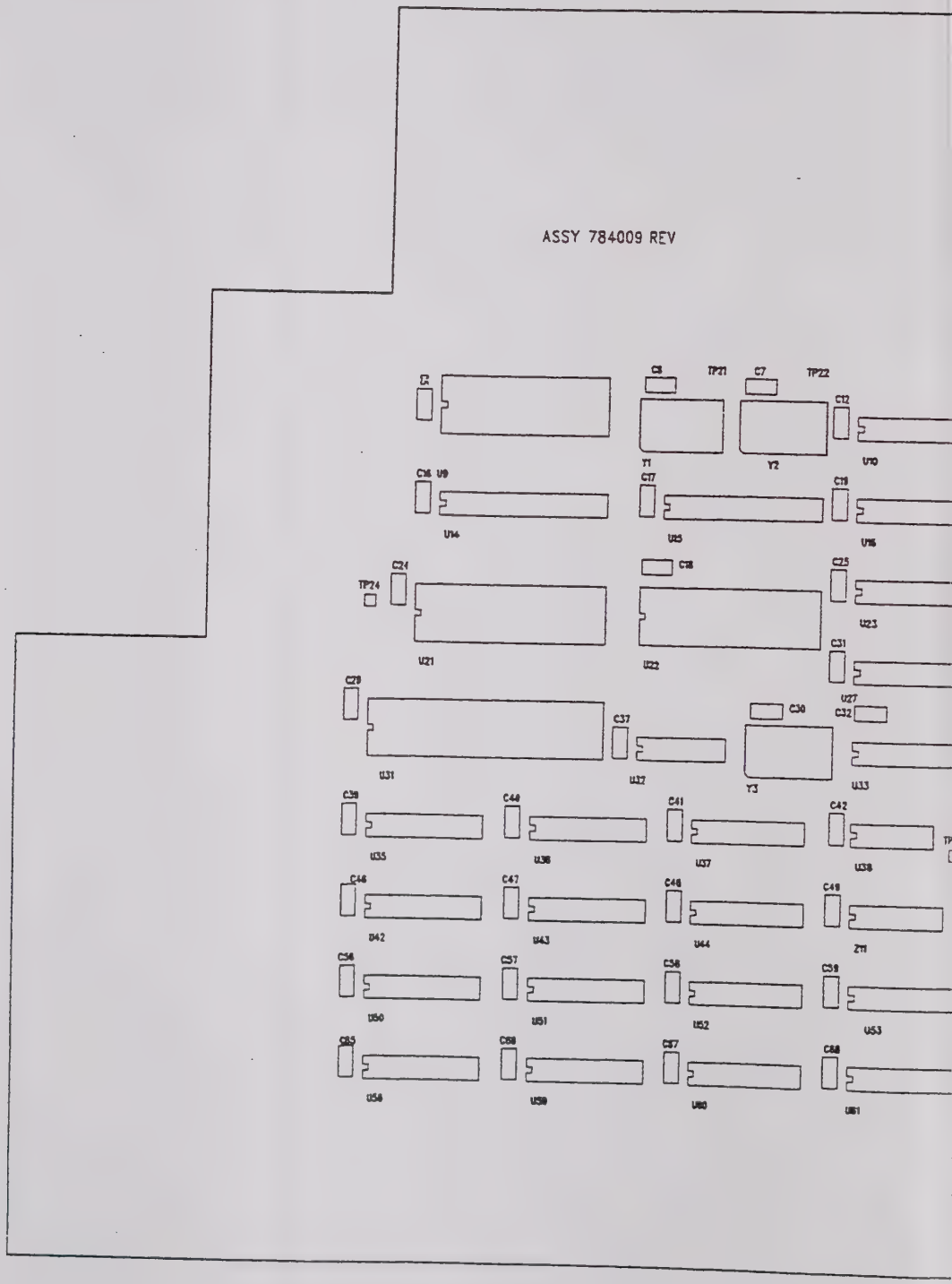

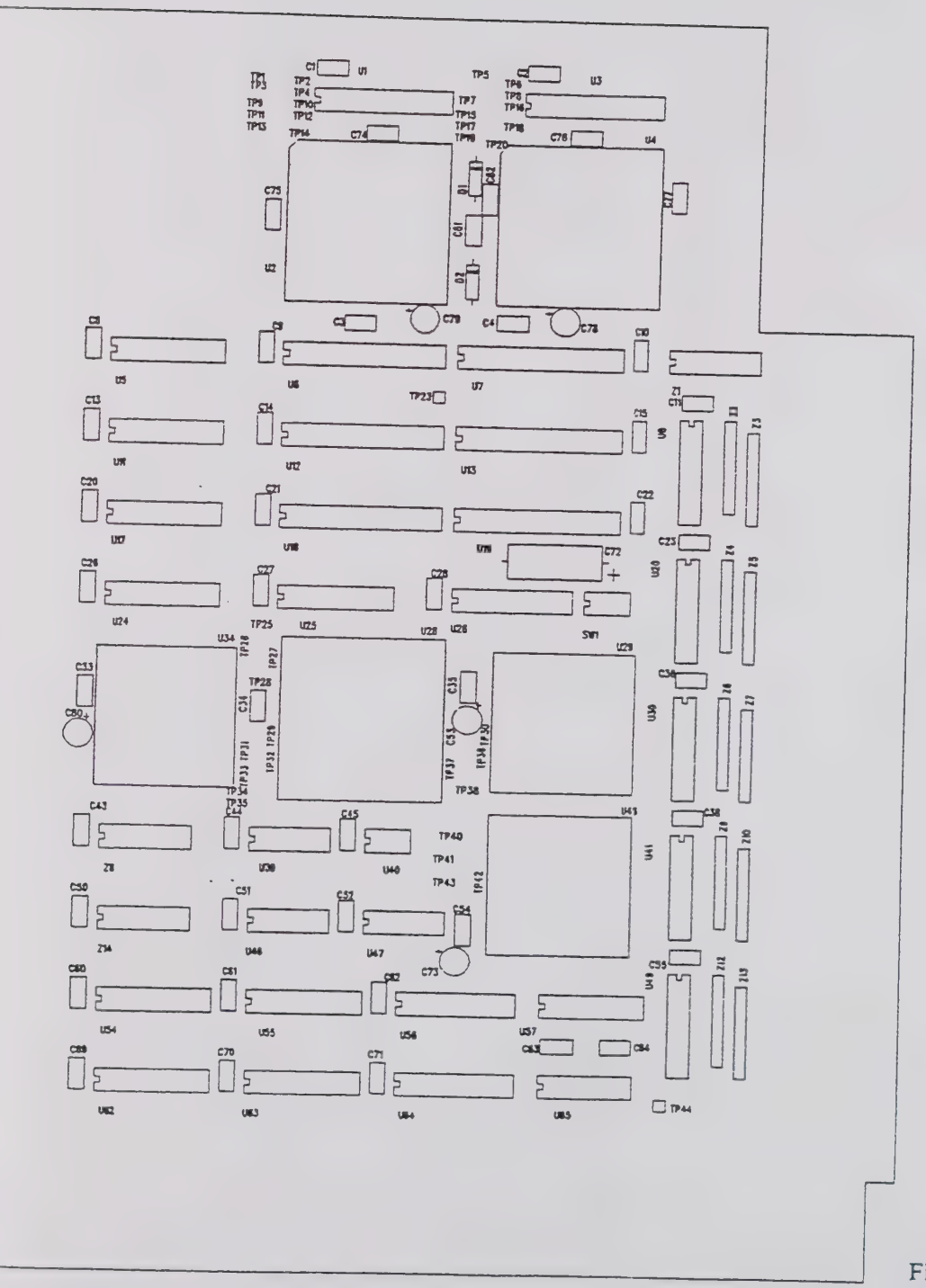

Fig. 6-2. System Board Assembly
Sheet 1 of 2

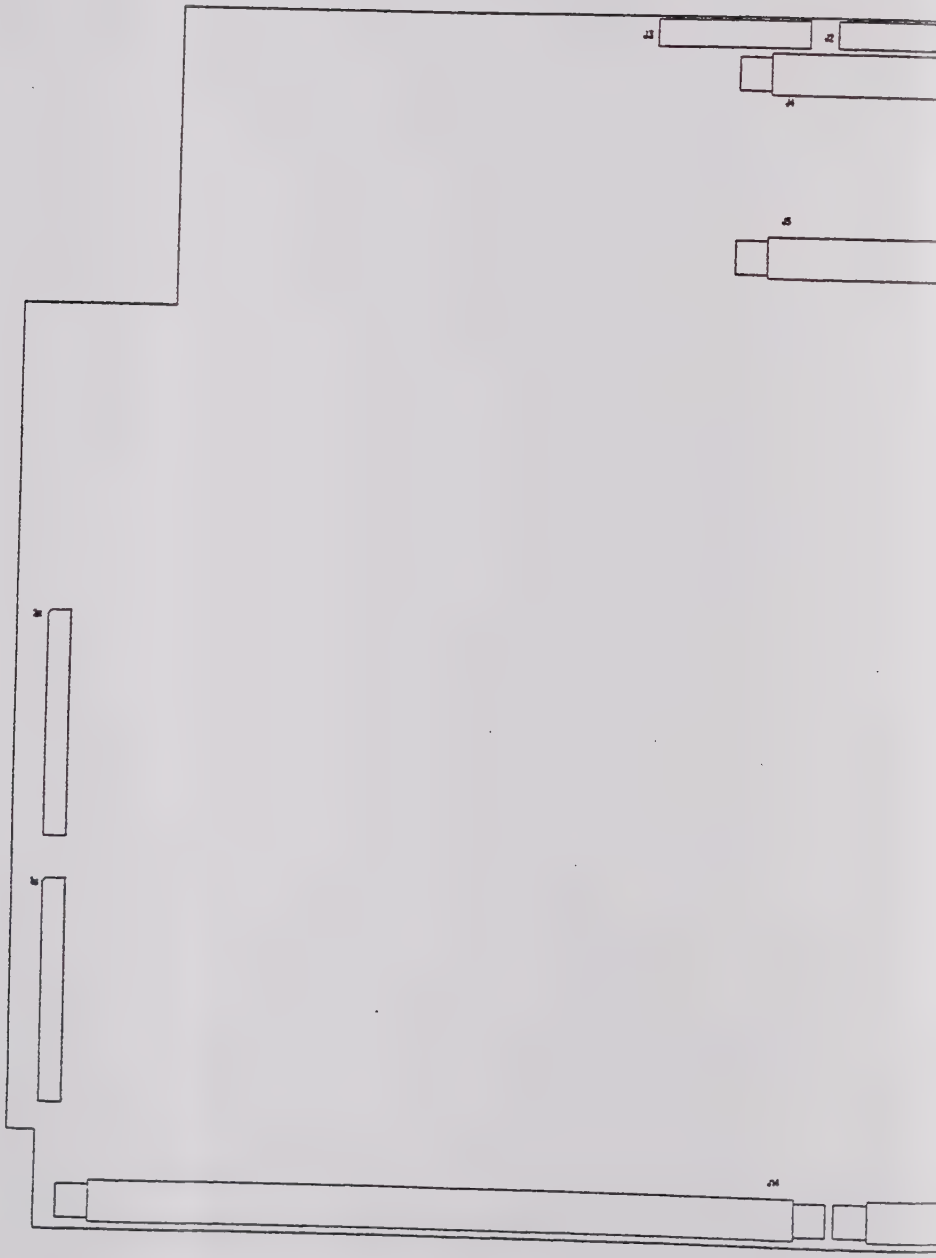

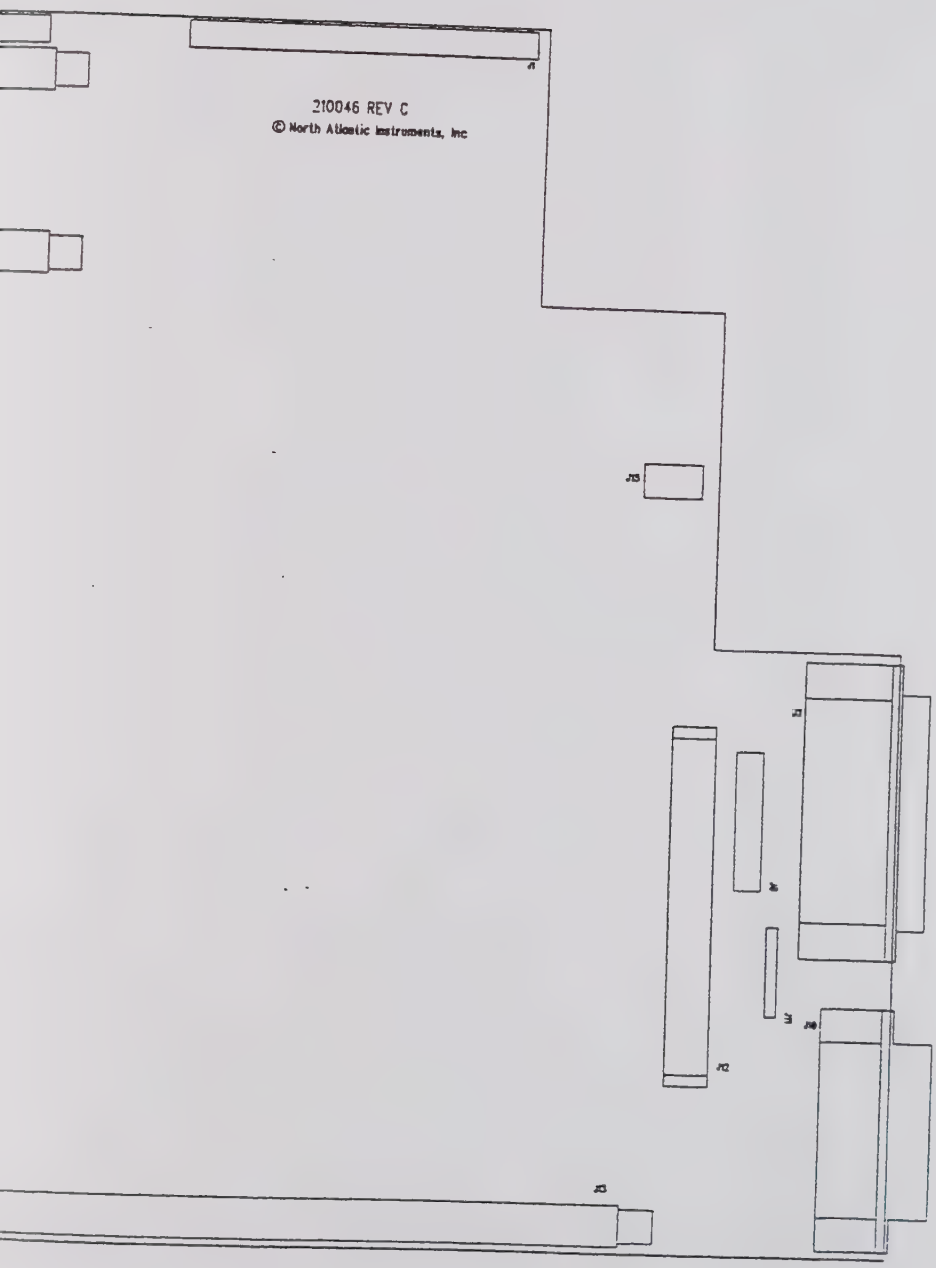

Fig. 6-2. System Board Assembly
Sheet 2 of 2

Table 6-2. System Board Assembly A1, Parts List

REFERENCE DESIGNATORS	DESCRIPTION / VENDOR PART NO.	NAI PART NO.	QTY
C1-52,54-71,74-77,81,82-87	CAP,CER,.1UF,50V,20%,Z5U,RADIA SR215E104MAA - AVX ONLY	886063	81
C53,C73,78-80,88,89	CAP,TANT-POL,10UF,25V,+-20% NDTM106K25,NIC OR EQUAL	886060	7
C72	CAP,AL-EL,100UF,16VDC,+-20% 500D107M016CB2,SPRAGUE	889028	1
D1,2	DIODE,SIG,PIV60V,0.015A 1N6263	883449	2
J1	CONN,HDR,20-POS,1-ROW,156CTR 2-87160-0 NC/NR,AMP	810301	1
J10	CONN,IEEE,RCPT,PCB,RT.A REV.A,552740-2,AMP	810331	1
J12,J15	TERMINAL,MISC MAGNUM ELECTRIC # 1011-04	883071	9
J13,J14	CONN,EDGE,60-POS,DBL.READ,100C EZC60DRXH,SULLINS,(LO-PROFILE)	810232	2
J2,J3	CONN,HDR,9-POS,1-ROW,156CENTER 1-87160-0,AMP	810302	2
J4,J5	CONN,EDGE,18-POS,DBL.READ,100C EZC18DRXH,SULLINS,(LO-PROFILE)	810233	2
J6,J9	CONN,HDR,40-POS,DBL.ROW TSW-120-07-L-D,SAMTEC	810286	2
R1,2	RES,CMPSN,470 OHM,5%,1/8W RLR05C4700GS	RCR05G471JS	2
SW1	SW,DIP,ROCKER,RAISED,4POS,SEAL 76SB04S,GRAYHILL	810090	1
TP1-TP44,J11	CONN,HDR,POST,.025 SQUARE * 87022-9,AMP ONLY,MOD2MACH.APPL	880007	52
U1	IC,PROGRAMMED REV.A,BLANK=888855	600020	1
U14,U15	IC,RAM,8Kx8,20 OR 25ns,28PIN 7164,IDT7164S25TP(20TP),IDT	888797	2
U2,4	IC,DSP,24BIT,40MHZ DSP56002FC40 MOTOROLA	810607	2

Table 6-2. System Board Assembly A1, Parts List (Cont'd.)

REFERENCE DESIGNATORS	DESCRIPTION / VENDOR PART NO.	NAI PART NO.	QTY
U21	IC,PROGRAMMED REV.A,BLANK=889939	600018-5	1
U22	IC,PROGRAMMED REV.A,BLANK=889939	600019-5	1
U24	IC,CMOS,LATCH,OCTAL D,3 STATE 373,SN74HCT373N,TI OR =	810228	1
U27,33,55,56	IC,CMOS,TRANSCVR,OCTAL,3STATE 245,SN74HCT245N/AN	889157	4
U28	IC,FPGA,PROGRAMMED REV A,BLANK=889920	600017	1
U29,U48	IC,FPGA,PROGRAMMED REV A,BLANK=889938	600016	2
U3	IC,PAL REV.A,BLANK=888855	600021	1
U31	IC,INTERFACE,IEEE488CONTROLLER 9914,NAT9914APD,NAT INST	885996	1
U32	IC,CMOS,CNTR,BINARY,4-BIT,SYNC 161,SN74HCT161N,TI OR =	810227	1
U34	IC,MICROPROC,16/32BIT,8MHzPLCC 000,MC68HC000FN10,MOT	810007	1
U35	IC,INTERFACE,TRANSCVR,OCTAL,GP 160,SN75160A/BN	885997	1
U36	IC,INTERFACE,TRANSCVR,OCTAL,GP 161,SN75161A/BN &	885998	1
U38	IC,CMOS,AND GATE,QUAD,2-INPUT 08,SN74HCT08N,	886198	1
U39	IC,TTL,INVERTER,HEX,1-INPUT 05,SN74ALS05N	888775	1
U40	IC,VOLTAGE MONITOR,FOR uP 1232,CS1232P,(DALLAS-DS1232P)	889922	1
U46	IC,TTL,INVERTER,HEX,SCHMITT 14,SN74LS14N	883703	1
U47	IC,CMOS,NAND GATE,QUAD,2-INPUT 00,SN74HCT00N,TI	810384	1

Table 6-2. System Board Assembly A1, Parts List (Cont'd.)

REFERENCE DESIGNATORS	DESCRIPTION / VENDOR PART NO.	NAI PART NO.	QTY
U5,10,11,16,17,23,25,26	IC,CMOS,BUFFER,OCTAL,TRI-STATE 244,SN74HCT244N,orSN74HCT244E	886192	8
U53,54,58,59,60,61,62,63,64	IC,CMOS,FLIP-FLOP,D,OCTAL,EDGE 574,SN74HCT574N,SN74HCT574E,TI	889011	9
U6,7,12,13,18,19	IC,RAM,32Kx8,15ns 2568,MT5C2568-15,MICRON ^	810223	6
U65	IC,CMOS,DECODER/DMUX,3TO8 LINE 138,SN74HCT138N,	886189	1
U8,20,30,41,49,57	IC,INTERFACE,DRIVER,8-CH,C/TTL 2985,UDN2985A,ALLEGRO	810229	6
U9	IC,EEPROM,8KX8,28PINDIP,CMOS 28,AT28C64-25PC,ATMEL OR =	889272	1
XU21,XU22	SOCKET,IC,32-POS,DIP,100x600CT 2-644018-1,AMP	810112	2
XU28	SOCKET,PLCC,84-POS,SQUARE 821573-3,AMP	890059	1
XU29,XU34,XU48	SOCKET,PLCC,68-POS,SQUARE QILE68P-410T,BURNDY ^	888847	3
Y1,Y2	OSC,20MHz,4 PIN IN 14 PIN,DIP KXO-01-1-20M,AVX, CTX119-ND ^	810297	2
Y3	OSC,10MHZ,CMOS,4P DIP SG51P-10.000,EPSON,SE1708ND	890039	1
Z1,Z8,Z14	RES,NET,BUS,DIP,3.30KX15,16P 4116R-002-332 BOURNS ^	885964	3
Z11	RES,NET,BUS,DIP,15KX15,16P 4116R-002-153,BOURNS	810231	1
Z15	RES,NET,ISO,DIP,3.3KXB,16P 4116R-001-332,BOURNS	810879	1
Z16	RES,NET,BUS,SIP,47KX5,6P,2% BOURNS,100PPM ^	4306R-101-473	1
Z2-Z7,9,10,12,13	RES,NET,ISO,SIP,47X4,8P,1W 4608M-102-470 or 4608X-102-470	810230	10

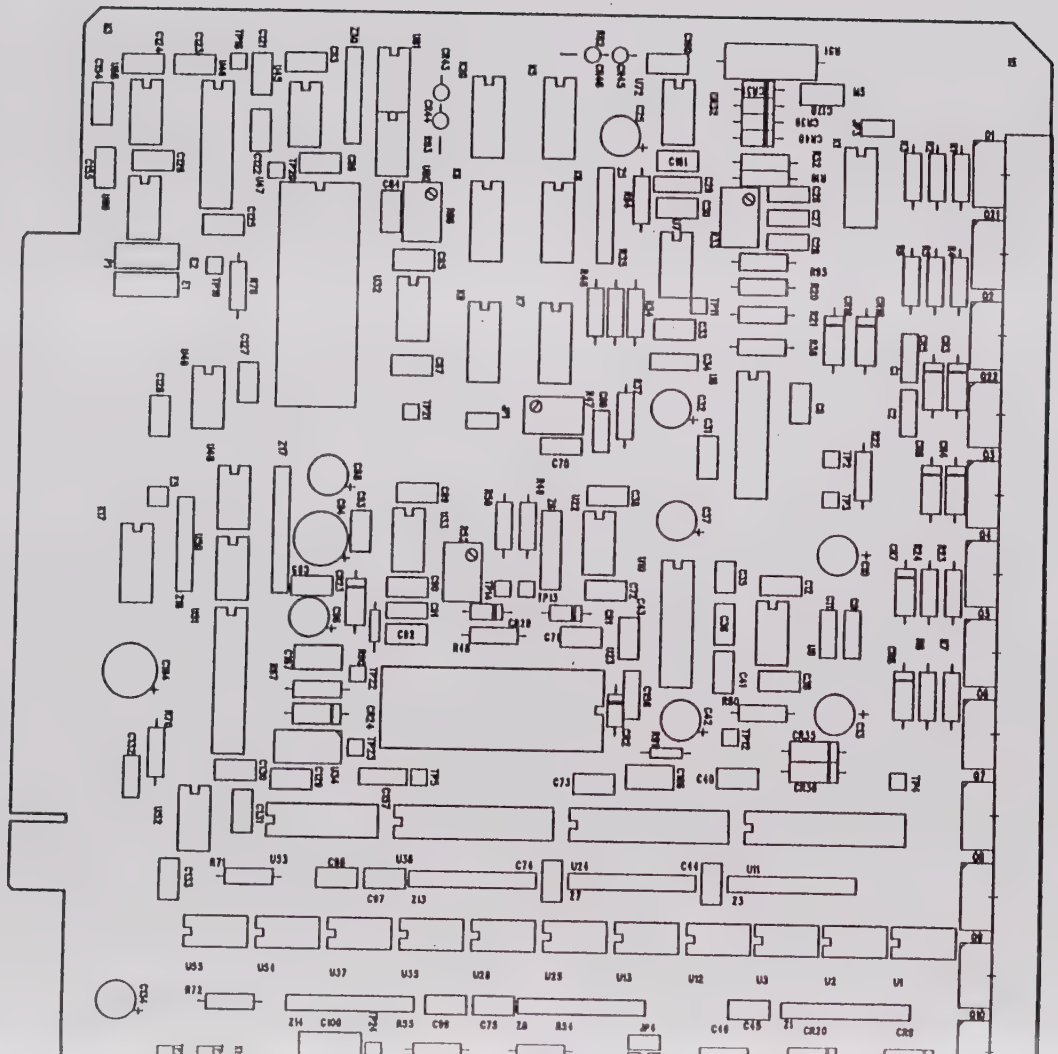

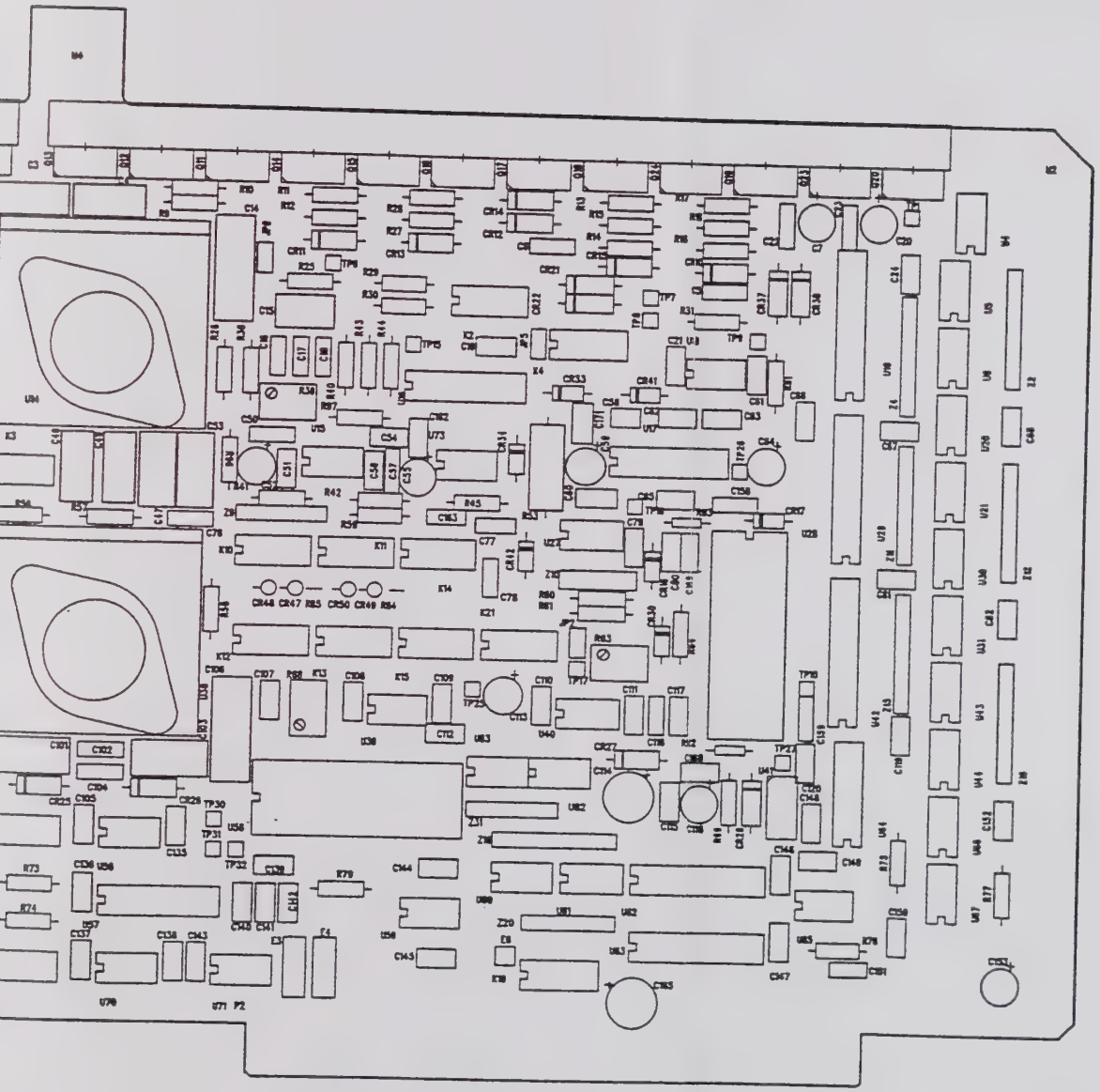

Fig. 6.3 Sine/cosine
Board Assembly

Table 6-3. Sine/Cosine Board Assembly A2, Parts List

REFERENCE DESIGNATORS	DESCRIPTION / VENDOR PART NO.	NAI PART NO.	QTY
C1,2,5,6,9,11,22,23	CAP,CER,.1UF,100V,+-10% CK06BX104K ^	880640	8
C132,C151	CAP,CER,120PF,10%,200V C052C121K2X5CA, CCR05CG121JR	810159	2
C14,C106	CAP,FILM,.1UF,400V,10%,POLYSTR 104MSR400K,ILLINOIS CAP	810166	2
C15,C100	CAP,MICA,220PF,500V,+-5% DM10FD221J,SUSCO	802448	2
C156,158	CAP,CER,1UF,50V,+-10% CK06BX105K ^	805155	2
C157,159	CAP,CER,.47UF,50V,10%,X7R,RADI CK06BX474K,MALLORY ^	882449	2
C16,C26	CAP,CER,.0033UF,100V,5% C052C332J1X5CA,CCR05CG332JR ^	810161	2
C170,C171	CAP,CER,.022UF,200V, 5% MR062C223JAA ^	810403	2
C18,C28	CAP,CER,.0047UF,100V,5% C052C472J1X5CA KEMET OR EQUAL	810163	2
C25,32,37,42,52,55,59,64,88,96,113,118,134,153	CAP,TANT-NON,10UF,35V,10% TDC106K035NSF,MALLORY ^	810168	14
C29,34,46,50,57,76,102,104	CAP,CER,.01UF,200V,10% CK06BX103K ^	810164	8
C3,C48	CAP,MICA,330PF,500V,+-5% DM 15-331 J,ELMENCO ^	802242	2
C35,C58	CAP,CER,.0022UF,50V,5% SR205A222JAA, C320C222J5G5CA	810167	2
C4,C49	CAP,MICA,20PF,500V,+-.5PF DM15D200D4CR,ELMENCO OR EQUAL^	807526	2
C47,53,101,103	CAP,FILM,.1UF,250V,10%,POLYSTR 104MSR250K,ILLINOIS CAP	810165	4
C69,C77,91,116	CAP,CER,12PF,200V,5% C052C120J2X5CA KEMET ^	810160	4
C7,10,13,20	CAP,AL-EL,10UF,100V,20% 106CKR100M,ILLINOIS	810158	4

Table 6-3. Sine/Cosine Board Assembly A2, Parts List (Cont'd.)

REFERENCE DESIGNATORS	DESCRIPTION / VENDOR PART NO.	NAI PART NO.	QTY
C70,C78	CAP,CER,47PF,100V,5% C052C470J1R5CA KEMET OR EQUAL	810162	2
C8,12,19,21,24,30,31,33,36,38-41,43-45,51,54,56,60-63,65-68, 71-75,79-87,89,90,92,93,95,97-99,105,107-112,115,117, 119-131,133,135-150,152,154,155,160,161,162,163	CAP,CER,.1UF,50V,20%,Z5U,RADIA SR215E104MAA - AVX ONLY	886063	95
C94,C114,164,165	CAP,TANT-POL,22UF,35V,+-20% 199D226X9035EE2,SPRAGUE	883783	4
CR1,2,16,17,29,30	DIODE,SIG,PIV60V,0.015A 1N6263	883449	6
CR23,27	DIODE,ZENER,5.10V,0.4W,5% 1N751A OR 1N751B	804066	2
CR3-6,10,12,14,15,24,28	DIODE,SIG,PIV400V,1A 1N4004	803735	10
CR31-34	DIODE,ZENER,5.60V,1W,5% 1N4734A	803552	4
CR35,36,37,38	DIODE,ZENER,3.90V,0.5W,5% 1N5228B MOT OR EQUAL	810397	4
CR39-42	XSTR,JFET,N.CH,30V,-0.5VgsDEPL 2N5246,TEX INST. OR =,TO-92 ^	806213	4
CR51-56	DIODE,SIG,PIV85V,0.010A,10nS 1N4607,LOW CAPACITANCE	810406	6
CR57,58,65,66	DIODE,PROTECTION,5V,300W,SOT23 SL05,SEMTECH	810504	4
CR59,60,63,64	TVS,154-171V,PP1.50KW 1.5KE180A	810493	4
CR61,62,67,68	TVS,53-58.9V,PP1.5KW 1.5KE62A	810485	4
CR7-9,11,13,18-22,25,26	DIODE,RECT,PIV600V,1A,ULTRAFAS MUR160,MOTOROLA,AXIAL,59-04	810487	12
E1-4	TERM,FAST-ON,PC MOUNT 1212 KEYSTONE	810579	4
H1,H2	HEAT SINK, SINE/COSINE BOARD REV.C	210040	2
H3,H4	CONDUCTOR,PAD,SMALL,HEATSINK REV.A	301117	2

Table 6-3. Sine/Cosine Board Assembly A2, Parts List (Cont'd.)

REFERENCE DESIGNATORS	DESCRIPTION / VENDOR PART NO.	NAI PART NO.	QTY
H3,H4	HEATSINK,POWER AMP REV.B	301082	2
JP1,JP2,JP3,JP5	JUMPER,100CTR,MINI,2-POS,W/HSG 65474-001,BERG	884691	4
K1-K21	RELAY,2 FORM C,5V,1A EA2-5NJ,NEC ONLY NC/NR	889575	21
Q1,3,4,5,6,15,16,17,18,20-24	XSTR,PWR,PNP,150V,30MHZ,50W,8A MJE15031,MOTOROLA,TO-220AB	810140	14
Q2,7,8,9,10,11,12,13,14,19	TRANSISTOR,MARKING REV.A	210201	10
R1,R4,R13,R17	RES,MF,8.25K,1%,1/8W,100PPM RN55D8251F ^	807017	4
R10,R57	RES,MF,2.21K,1%,1/8W,100PPM RN55D2211F ^	810172	2
R19,R38	RES,MF,200 OHM,1%,1/8W,100PPM RN55D2000F ^	810174	2
R2,5,9,15,18,56,90-93	RES,MF,100 OHM,1%,1/8W,50PPM RNC55H1000FS ^	808143	10
R20,R44	RES,MF,4.99K,1%,1/8W,50PPM RN55C4991F ^	880045	2
R21,R40	RES,MF,2.49K,1%,1/8W,100PPM RN55D2491F ^	808317	2
R22,R31	RES,WW,100 OHM,1%,2W RW80U1000F ^	807648	2
R25,R54	RES,MF,3.09K,1%,1/8W,100PPM RN55D3091F OR EQUAL	810208	2
R26,R32	RES,MF,3.83K,1%,1/10W,100PPM RN55D3831F ^	807127	2
R29,R55	RES,MF,69.80K,1%,1/8W,100PPM RN55D6982F	810179	2
R3,R16	RES,MF,280 OHM,1%,1/8W,100PPM RN55D2800F	810175	2
R30,R58	RES,MF,34 OHM,1%,1/8W,100PPM RN55D34R0F OR EQUAL	810177	2

Table 6-3. Sine/Cosine Board Assembly A2, Parts List (Cont'd.)

REFERENCE DESIGNATORS	DESCRIPTION / VENDOR PART NO.	NAI PART NO.	QTY
R33,39,66,68	RES,VAR,10K,10%,1/2W,TRIM,25TU 3299W-1-103,BOURNS ^	883144	4
R34,R41	RES,MF,1.21M,1%,1/8W,100PPM RN55D1214F OR EQUAL	810170	2
R35,42,70,76	RES,MF,1.10K,1%,1/4W RLO7C1101FS,TYPE C4	805144	4
R36,R43	RES,MF,909 OHM,1%,1/8W,100PPM RN55D9090F ^	886500	2
R37	RES,MF,2.67K,1%,1.10W,100PPM RN55D2671F ^	887987	1
R45	RES,MF,3.65K,1%,1/10W CC3651F,ALLEN BRADLEY	807632	1
R46,R59	RES,MF,2.74K,1%,1/8W,100PPM RN55D2741F ^	810173	2
R47	RES,VAR,2K, 3299W-1-202 RJ24FW202,BOURNS	810192	1
R48,R64,65,67,69	RES,CMPSN,10K,5%,1/4W, RLR07C1002GS ^	880092	5
R49,R60	RES,MF,8.87 OHM,1%,1/8W,100PPM CMF-55-8R87FT-1,DALE	810180	2
R50,R61	RES,MF,1.47K,1%,1/8W,100PPM RN55D1471F OR EQUAL ^	810171	2
R51,53	RES,MF,18K,5%,2W,100PPM CPF-2183JT-1 DALE OR EQUAL	810468	2
R52,R63	RES,VAR,20 OHM,10%,1/2W,TRIM 3299W-1-200,BOURNS,25 TURN	890040	2
R6,R14	RES,MF,432 OHM,1%,1/8W,100PPM RN55D4320F	810178	2
R62,98	RES,CMPSN,7.5OHM,5%,1/8W RC05GF7R5J ^	805874	2
R7,8,11,12,23,24,27,28	RES,MF,1 OHM,5%,1/3W 5063JD1R000J,MEPCO	889019	8
R71,R75	RES,CMPSN,4.70K,5%,1/4W RCR07G472JS,RLR07C4701G ^	880088	2

Table 6-3. Sine/Cosine Board Assembly A2, Parts List (Cont'd.)

REFERENCE DESIGNATORS	DESCRIPTION / VENDOR PART NO.	NAI PART NO.	QTY
R72,R77	RES,CMPSN,220 OHM,5%,1/4W RLR07C2200GS or COMMERCIAL = ^	880078	2
R73,R74	RES,CMPSN,68K,5%,1/4W RCR07G683JS,RLR07C6802G	880098	2
R78,79,80,81	RES,CMPSN,270 OHM,5%,1/4W RCR07G271JS,RLR07C2700G ^	880079	4
R82,83,84,85	RES,MF,243 OHM,1%,1/4W,100PPM RN55D2430F DALE ^	810348	4
R94-97	RES,MF,49.90K,1%,1/8W,50PPM RNC55H4992FS	807635	4
TP1-TP32,TP33,34,JP1,JP2,JP3,JP5	CONN,HDR,POST,.025 SQUARE * 87022-9,AMP ONLY,MOD2MACH.APPL	880007	42
U1,2,3,4,5,6,12,13,20,21,25,26,30,31,35,37,43,44,54,55,66,67	IC,OPTOCOUPLER,DUAL HCPL2530,HP &	810295	22
U10,17,46,57	IC,SW,2-SPST,1-N.C.,1-N.O. 613,DG613DJ,SILICONIX	810132	4
U11,19,24,29,36,42	IC,CMOS,FLIP-FLOP,D,OCTAL,EDGE 574,SN74HCT574N,SN74HCT574E,TI	889011	6
U14,U38	IC,OPAMP,HI-VOLT,SR40V/us,TO-3 41,PA41,APEX ^	810137	2
U22,27,32,33,39,40,45,49,56,59,68,69,70,71,72,73	IC,OPAMP,SR2.8V/usGBW8M,Vos10u 27,OP27EP,PMI	810135	16
U23,U28	IC,MDAC,16-BIT,HIGH SPEED 9371,HS9371J,SIPEX ONLY	810134	2
U34,U41	IC,REG,+5V,1.5A,TO-220,3 TERM 340,LM340T-5.0,NAT	808498	2
U47,U58	IC,SW,MUX,16-1,ANALOG 406,DG406DJ,SILICONIX	810130	2
U48,50,60,61	IC,INTERFACE,OPTOCPLR,DUAL8PIN 6,MCT6,GI OR =	885991	4
U51,62,63	IC,INTERFACE,DRIVER,8-CHANNEL 2803,ULN2803A,MOT,ALLEGRO &	889911	3
U52,65	IC,OPTOCOUPLER,DUAL,HI-SPEED 2231,HCPL-2231,HP &	810133	2

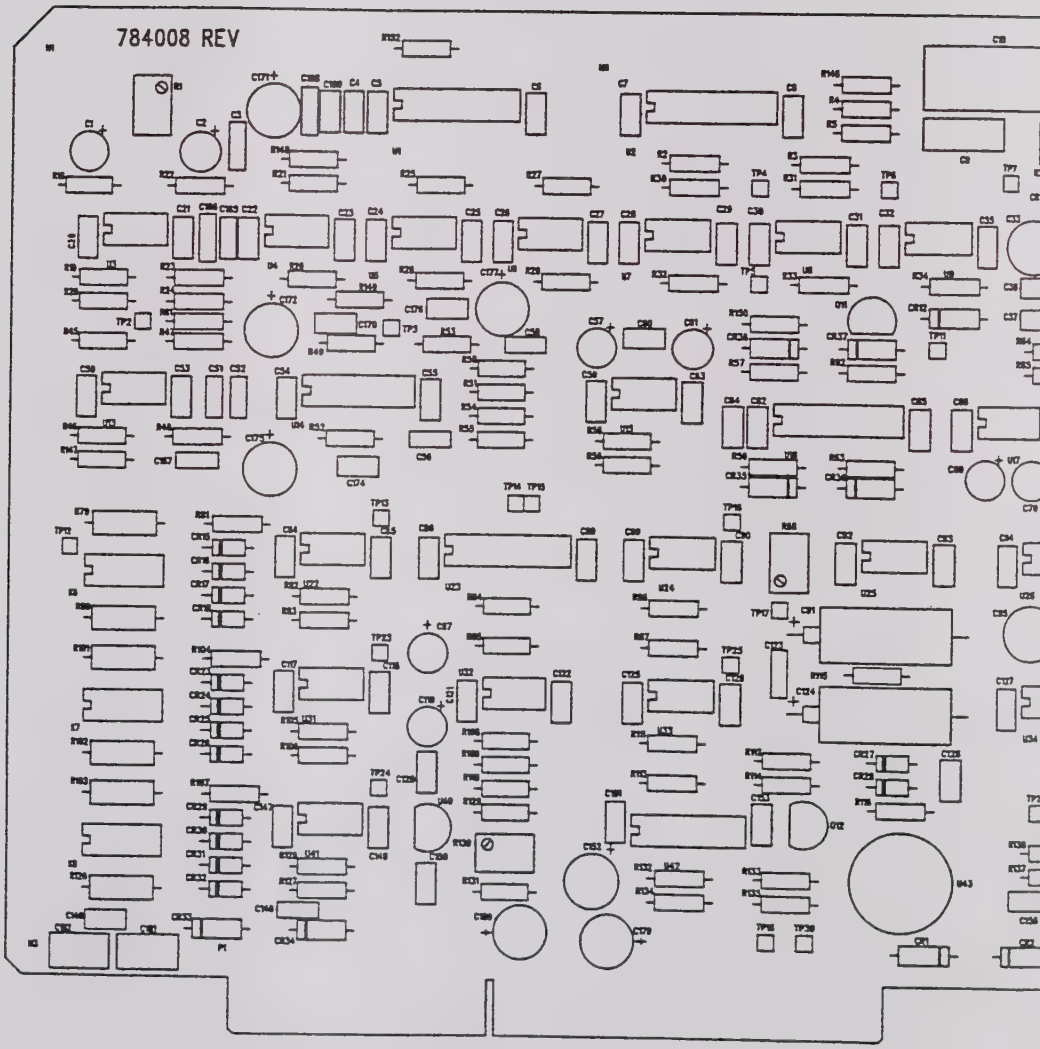
784008 REV

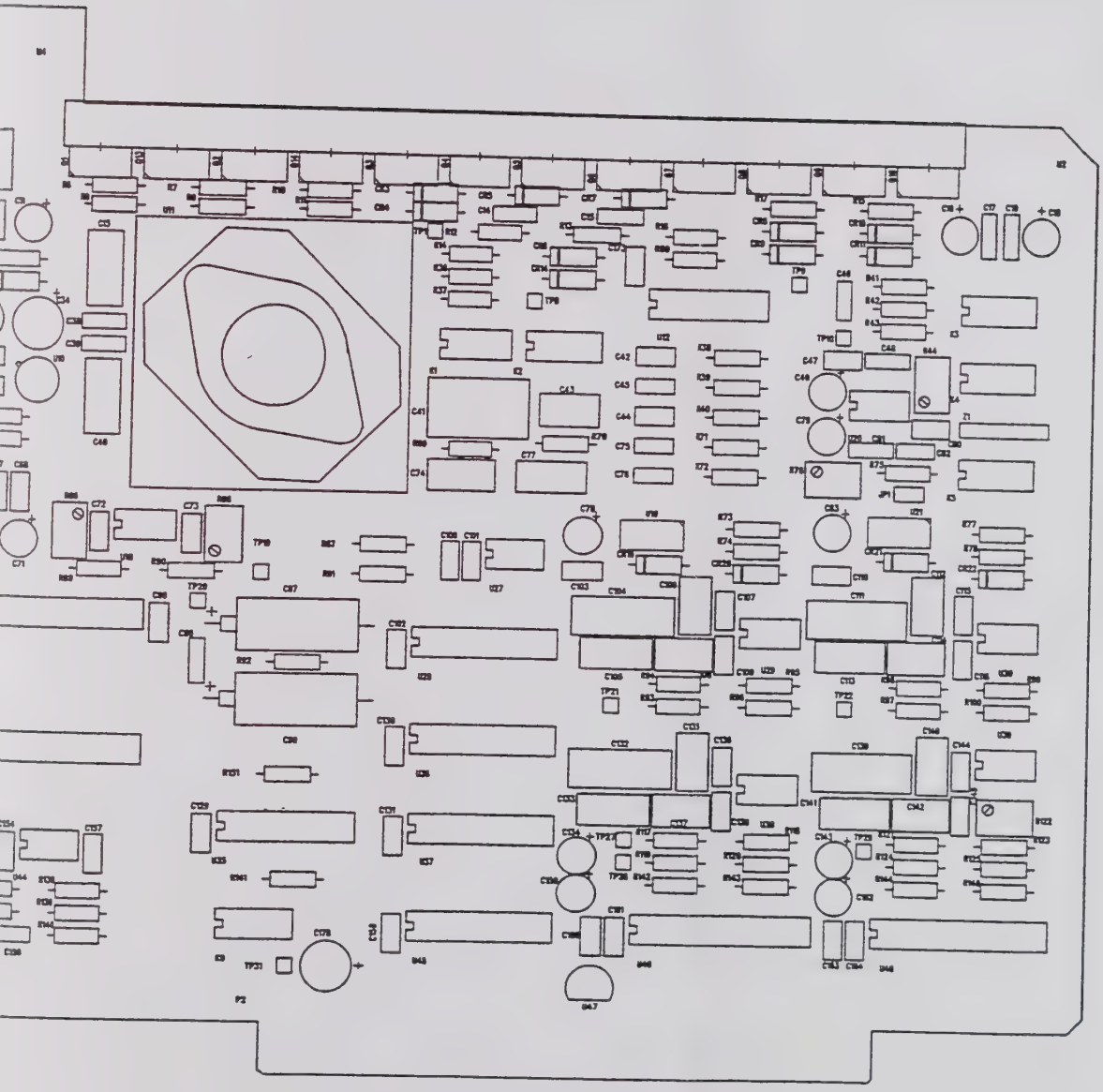

Fig. 6-4 Analog Board Assembly

Table 6-3. Sine/Cosine Board Assembly A2, Parts List (Cont'd.)

REFERENCE DESIGNATORS	DESCRIPTION / VENDOR PART NO.	NAI PART NO.	QTY
U53,U64	IC,TTL,INVERTER,HEX 04,SN74ALS04N	886134	2
U7,U15	IC,OPAMP,SR60V/us,GBW30MHz,DIP 17,OP17E2,PMI	810289	2
U8,U16	IC,SW,4-SPST,0-OFF,1-ON 445,DG445DJ,SILICONIX	810131	2
U80-83	IC,OPTOCOUPLER,LOGIC OUT,8 PIN 2731,HCPL-2731,HP	810409	4
U9,18	IC,OPAMP,SR100V/us,GBW16MHz 845,AD845KN,AD ^	810129	2
Z1,2,8,12,14,16	RES,NET,BUS,SIP,220X7,8P 4308H-101-221 or 4308R-101-221	810183	6
Z17,Z19	RES,NET,BUS,SIP,100KX7,8P 4308R-101-104,BOURNS ^	810182	2
Z18,Z20	RES,NET,BUS,SIP,330 OHMX5,3/4W 4306H-101-331,BOURNS or EQUAL^	810181	2
Z3,4,7,11,13,15	RES,NET,BUS,SIP,4.70KX7,8P,1W 4308R-101-472,BOURNS or EQUAL	810296	6
Z30,31	RES,NET,BUS,SIP,220X5,6P,0.75W 4306M-101-221,BOURNS ^	810410	2
Z5,Z9	RES,NET REV.B ^	810105	2
Z6,Z10	RES,NET,2-4.4444K,.005% REV.B,103-361	888808	2

Table 6-4. Analog Board Assembly A3, Parts List

REFERENCE DESIGNATORS	DESCRIPTION / VENDOR PART NO.	NAI PART NO.	QTY
C1,2,11,49,57,61,78,79,83,119,134,143,159,162	CAP,TANT-NON,10UF,35V,10% TDC106K035NSF,MALLORY ^	810168	14
C10	CAP,FILM,1.5UF,100V,10%,POLYS 155MSR100K,ILLINOIS CAP	810290	1
C104,111,132,139	CAP,MICA,2400PF,100V,1% DM19FD242F03 OR CM06FD242F03 ^	810189	4
C105,113,133,141	CAP,MICA,1200PF,100V,1% DM15FA122F03,CDE	810188	4
C106,112,135,140	CAP,MICA,180PF,500V,+-1% DM15-181F,ELMENCO ^	807433	4
C108,114,137,142,185	CAP,MICA,330PF,100V,1% DM10FA331F03,CDE OR EQUAL	810187	5
C13,C40	CAP,FILM,.1UF,250V,10%,POLYSTR 104MSR250K,ILLINOIS CAP	810165	2
C14,15,17,19	CAP,CER,.1UF,100V,+-10% CK06BX104K ^	880640	4
C148	CAP,CER,270PF,200V,10%,X7R,RAD CK05BX271K ^	885595	1
C156	CAP,CER,.001UF,200V,+-10 CK05BX102K ^	805788	1
C16,C18	CAP,ALUMEL,10UF,100V,20% 106CKR100M,ILLINOIS	810158	2
C165,C167	CAP,CER,68PF,200V,1%NPO,RADIAL CC05CG680F,AVX	810344	2
C169,170,173,174,176,183,186-190	CAP,CER,.1UF,50V,20%,Z5U,RADIA SR215E104MAA - AVX ONLY	886063	11
C182,400,401	CAP,MICA,68PF,500V,+-5% SCDM 10-680 J,ELMENCO ^	802171	3
C3,C166,168	CAP,CER,1UF,50V,+-10% CK06BX105K ^	805155	3
C33,171,172,175,177,178,179,180	CAP,TANT-POL,22UF,35V,+-20% 199D226X9035EE2,SPRAGUE	883783	8
C34,95,152,184	CAP,TANT-POL,47UF,25V+-10% 199D476X9025EE2,SPRAGUE ^	884614	4

Table 6-4. Analog Board Assembly A3, Parts List (Cont'd)

REFERENCE DESIGNATORS	DESCRIPTION / VENDOR PART NO.	NAI PART NO.	QTY
C38,39,48,81	CAP,CER,.01UF,200V,10% CK06BX103K ^	810164	4
C4-8,12,20-32,35-37,42,44,47,50,53-55,59,60,62-68,72,73,80,84-86,88-90,92-94,96,100-103,107,109,110,115-118,120-122,125-131,136,138,144-147,149-151,153-155,157,158,160,161,163,164	CAP,CER,.1UF,50V,20%,Z5U,RADIA SR215E104MAA - AVX ONLY	886063	95
C41	CAP,FILM,.1UF,630V,10%,POLYSTR 104MSR630K EQUAL,ILLINOIS CAP	810190	1
C43,C181	CAP,MICA,220PF,500V,+-5% DM10FD221J,SUSCO	802448	2
C46	CAP,CER,12PF,200V,5% C052C120J2X5CA KEMET ^	810160	1
C69,70,71	CAP,TANT-NON,4.7UF,25V,10% TDC475K025NSF,MALLORY OR EQUAL	810191	3
C74	CAP,MICA,330PF,500V,+-5% DM 15-331 J,ELMENCO ^	802242	1
C75	CAP,CER,.0033UF,100V,5% C052C332J1X5CA,CCR05CG332JR ^	810161	1
C76	CAP,CER,.0047UF,100V,5% C052C472J1X5CA KEMET OR EQUAL	810163	1
C77	CAP,MICA,20PF,500V,+-.5PF DM15D200D4CR,ELMENCO OR EQUAL^	807526	1
C82	CAP,CER,100PF,200V,+-10% CK05BX101K ^	805210	1
C87	CAP,AL-EL,100UF,25V 107CKR025M,ILLINOIS CAP	810274	1
C9	CAP,FILM,.22UF,100V,10%,POLYS 224MSR100K,ILLINOIS	810169	1
C91,97,99,124	CAP,TANT-POL,100UF,20V,+-10% CSR13E107KM ^	805628	4
C98,C123	CAP,CER,.47UF,50V,10%,X7R,RADI CK06BX474K,MALLORY ^	882449	2
CR,5,7,9,11,12,19,20,21,22	DIODE,SIG,PIV400V,1A 1N4004	803735	9
CR1,2	DIODE,ZENER,4.30V,0.5W,5% 1N5229B,MOTOROLA	810449	2

Table 6-4. Analog Board Assembly A3, Parts List (Cont'd)

REFERENCE DESIGNATORS	DESCRIPTION / VENDOR PART NO.	NAI PART NO.	QTY
CR13	DIODE,ZENER,10V,0.4W,10% 1N758	800658	1
CR15,16,17,18,23,24,25,26,27,28,29,30,31,32	DIODE,SIG,PIV75V,0.010A,4nS 1N4148 OR 1N4153	808974	14
CR3,4,6,8,10,14	DIODE,RECT,PIV600V,1A,ULTRAFAS MUR160,MOTOROLA,AXIAL,59-04	810487	6
CR35,36,37,38	DIODE,ZENER,3.30V,0.5W,20% 1N5226	807063	4
CR39,40	TVS,171-190V,PP1.50KW 1.5KE200A	810483	2
CR45,46	TVS,53-58.9V,PP1.5KW 1.5KE62A	810485	2
CR47-48	DIODE,PROTECTION,5V,300W,SOT23 SL05,SEMTECH	810504	2
H1	HEAT SINK, SINE/COSINE BOARD REV.C	210040	1
H2	HEATSINK,8PIN,TO-3 HS09,APEX	810221	1
JP1,2	JUMPER,100CTR,MINI,2-POS,W/HSG 65474-001,BERG	884691	2
K1,K2,K3,K4,K5,K6,K7,K8,K9	RELAY,2 FORM C,5V,1A EA2-5NJ,NEC ONLY NC/NR	889575	9
Q1,3,4,5,6,13,14	XSTR,PWR,PNP,150V,30MHZ,50W,8A MJE15031,MOTOROLA,TO-220AB	810140	7
Q11	XSTR,JFET,N-CH,4V,Rds(ON)10 PN5434,NAT	890058	1
Q12	XSTR,MOSFET,N-CH,30V,RdsON1.2 VN0300M,SILICONIX ONLY,TO-237	886496	1
Q2,7,8,9,10	TRANSISTOR,MARKING REV.A	210201	5
R1,R68	RES,VAR,1K,10%,1/2W,TRIM,25TRN 3299W-1-102,BOURNS	807227	2
R10	RES,MF,432 OHM,1%,1/8W,100PPM RN55D4320F	810178	1

Table 6-4. Analog Board Assembly A3, Parts List (Cont'd)

REFERENCE DESIGNATORS	DESCRIPTION / VENDOR PART NO.	NAI PART NO.	QTY
R104,105,106	RES,MF,20K,0.1%,1/8W,25PPM RN55E2002B	808226	3
R107,127,128	RES,MF,4.75K,0.1%,1/8W,50PPM RN55C4751B OR RNC55H4751BS	810212	3
R109	RES,MF,75 OHM,1%,1/8W,100PPM RN55D75R0F	810215	1
R110	RES,MF,316 OHM,1%,1/8W,50PPM RN55C3160F	810211	1
R114	RES,MF,3.32K,1%,1/8W,50PPM RN55C3321F	807631	1
R116	RES,MF,40.20K,1%,1/8W,100PPM RN55D4022F	806987	1
R12	RES,WW,100 OHM,1%,2W RW80U1000F	807648	1
R122	RES,VAR,5K,10%,1/2W,TRIM,25TRN 3299W-1-502,BOURNS	883066	1
R123	RES,MF,12.40K,1%,1/8W,100PPM RN55D1242F OR EQUAL	810202	1
R129	RES,MF,24.90 OHMS,1%,1/8W,100P RN55D24R9F OR EQUAL	810207	1
R13,15,16,17	RES,MF,1 OHM,1%,1/4W,100PPM CMF-55-1R00-F-T1,DALE OR =	810195	4
R130	RES,VAR,500HM,10%100PPM,25TURN 3299W-1-500,BOURNS	810193	1
R132	RES,MF,931K,1%,1/8W,50PPM RN55C9313F OR EQUAL	810218	1
R134	RES,MF,3.57K,1%,1/8W,50PPM RN55C3571F	810209	1
R136	RES,MF,4.22K,1%,1/8W,50PPM RN55C4221F	808100	1
R139	RES,MF,1M,1%,1/8W,100PPM RN55D1004F	808262	1
R14	RES,MF,34 OHM,1%,1/8W,100PPM RN55D34R0F OR EQUAL	810177	1

Table 6-4. Analog Board Assembly A3, Parts List (Cont'd)

REFERENCE DESIGNATORS	DESCRIPTION / VENDOR PART NO.	NAI PART NO.	QTY
R141	RES,CMPSN,68K,5%,1/4W RCR07G683JS,RLR07C6802G	880098	1
R142,143,144,145	RES,CMPSN,10 OHM,5%,1/4W RCR07G100JS,RLR07C10R0G ^	883106	4
R146	RES,MF,113K,0.1%,1/8W,50PPM RN55C1133B OR RNC55H1133BS	810220	1
R147	RES,MF,56.20K,1%,1/8W,100PPM RN55D5622F,DALE	810343	1
R153,154	RES,MF,49.90K,1%,1/8W,50PPM RNC55H4992FS	807635	2
R155	RES,15 OHM,1/4W RCR07G150JS	802461	1
R156,157	RES,MF,2.80K,1%,1/8W,100PPM RN55D2801F DALE OR EQUAL ^	810466	2
R18,R22	RES,MF,4.75K,1%,1/8W,100PPM RN55D4751F	888693	2
R19,26,28,29,32,46,111,131	RES,MF,1K,1%,1/10W,50PPM CORNING/NC55 RN55C1001F ^	808213	8
R2,84,151	RES,CMPSN,3.30K,5%,1/4W RCR07G332JS,RLR07C3301GS ^	803388	3
R20,24,56,58,148,149	RES,CMPSN,100 OHM,5%,1/4W RCR07G101JS,RLR07C1000GS ^	882250	6
R200	RES,CMPSN,100 OHM,1/2W RC20GF101J	880601	1
R21	RES,MF,1.62K,1%,1/10W,100PPM RN55D1621F ^	807019	1
R23	RES,MF,59K,1%,1/8W,50PPM RN55C5902F ^	808184	1
R25,72,108	RES,MF,2.49K,1%,1/8W,100PPM RN55D2491F ^	808317	3
R27	RES,MF,1.21K,1/8W,+-1% RN55D1211F	807796	1
R3,R31,R33	RES,MF,11.50K,1%,1/8W,100PPM RN55D1152F OR EQUAL ^	810201	3

Table 6-4. Analog Board Assembly A3, Parts List (Cont'd)

REFERENCE DESIGNATORS	DESCRIPTION / VENDOR PART NO.	NAI PART NO.	QTY
R30	RES,MF,1.91K,1%,1/8W,100PPM RN55D1911F	810198	1
R34	RES,CMPSN,11K,5%,1/4W RCR07G113JS,RLR07C1102GS	802255	1
R35	RES,MF,100K,1%,1/10W,100PPM RN55D1003F ^	806992	1
R36	RES,MF,3.09K,1%,1/8W,100PPM RN55D3091F OR EQUAL	810208	1
R37	RES,MF,69.80K,1%,1/8W,100PPM RN55D6982F	810179	1
R38	RES,MF,909 OHM,1%,1/8W,100PPM RN55D9090F ^	886500	1
R39,85,87,135	RES,MF,4.99K,1%,1/8W,50PPM RN55C4991F ^	880045	4
R4	RES,MF,46.40K,0.1%,1/8W,100PPM RN55D4642B ^	810293	1
R40	RES,MF,3.83K,1%,1/10W,100PPM RN55D3831F ^	807127	1
R41	RES,MF,1.21M,1%,1/8W,100PPM RN55D1214F OR EQUAL	810170	1
R42	RES,MF,1.10K,1%,1/4W RLO7C1101FS,TYPE C4	805144	1
R43	RES,MF,2.74K,1%,1/8W,100PPM RN55D2741F ^	810173	1
R44,88	RES,VAR,10K,10%,1/2W,TRIM,25TU 3299W-1-103,BOURNS ^	883144	2
R45	RES,MF,2K,1%,1/8W,100PPM RN55D2001F ^	808352	1
R49	RES,CMPSN,270K,5%,1/4W RCR07G274JS,RLR07C2703GS ^	804400	1
R5	RES,MF,221K,0.1%,1/8W,100PPM RN55D2213B OR RNC55H2213BS	810206	1
R50	RES,CMPSN,22K,5%,1/4W RCR07G223JS,RLR07C2202GS	880368	1

Table 6-4. Analog Board Assembly A3, Parts List (Cont'd)

REFERENCE DESIGNATORS	DESCRIPTION / VENDOR PART NO.	NAI PART NO.	QTY
R52	RES,CMPSN,1K,5%,1/4W RCR07G102JS,RLR07C1001G	880084	1
R53	RES,CMPSN,1.80K,5%,1/4W RCR07G182JS,RLR07C1801G	810219	1
R55	RES,MF,82K,2%,1/4W,100PPM RLR07C8202GS	806752	1
R57	RES,MF,19.10K,0.1%,1/8W,50PPM RN55C1912B OR RNC55H1912BS	810214	1
R59	RES,MF,21.30K,0.1%,1/8W,50PPM RN55C2132B OR RNC55H2132BS	810205	1
R6,11,69,138	RES,MF,100 OHM,1%,1/8W,50PPM RNC55H1000FS ^	808143	4
R60,150,152	RES,CMPSN,270 OHM,5%,1/4W RCR07G271JS,RLR07C2700G ^	880079	3
R61	RES,MF,5.11K,1%,1/8W,100PPM RN55D5111F	806729	1
R62	RES,MF,1.15K,0.1%,1/8W,50PPM RN55C1151B	810196	1
R63	RES,MF,768 OHM,0.1%,1/8W,50PPM RN55C7680B OR RNC55H7680BS	810217	1
R64,92,112,115,133	RES,MF,10K,1%,1/8W,50/100PPM RN55C1002F ^	806108	5
R66,76	RES,VAR,2K, 3299W-1-202 RJ24FW202,BOURNS	810192	2
R67	RES,MF,3.83K,0.1%,1/8W,100PPM RN55D3831B OR RNC55H3831BS	810210	1
R7,9,65	RES,MF,8.25K,1%,1/8W,100PPM RN55D8251F ^	807017	3
R70	RES,MF,2.21K,1%,1/8W,100PPM RN55D2211F ^	810172	1
R71	RES,MF,200 OHM,1%,1/8W,100PPM RN55D2000F ^	810174	1
R73,R77	RES,MF,1.37K,1%,1/8W,100PPM RN55D1371F ^	810197	2

Table 6-4. Analog Board Assembly A3, Parts List (Cont'd)

REFERENCE DESIGNATORS	DESCRIPTION / VENDOR PART NO.	NAI PART NO.	QTY
R74,R78	RES,MF,20K,1%,1/8W,100PPM RN55D2002F	889585	2
R75	RES,MF,2.67K,1%,1.10W,100PPM RN55D2671F	887987	1
R79,80,101,102,103,126	RES,MF,100K,0.1%,1/4W,50PPM RN60C1003B	810194	6
R8	RES,MF,280 OHM,1%,1/8W,100PPM RN55D2800F	810175	1
R81,82,83	RES,MF,80.60K,0.1%,1/8W,50PPM RN55C8062B OR RNC55H8062BS	810216	3
R86	RES,MF,2.21K,1%,1/10W,25PPM	RNC55J2211FS	1
R89,137,140	RES,MF,1.00K,1%,1/8W,100PPM RN55D1001F,DALE or EQUAL	810292	3
R90	RES,MF,11K,0.1%,1/8W,100PPM RN55D1102B or RNC55H1102BS	810200	1
R91	RES,MF,4.64K,0.1%,1/8W,50PPM RN55C4641B	811089	1
R93,97,119,124	RES,MF,1.96K,1%,1/8W,100PPM RN55D1961F	810199	4
R94,98,117,121	RES,MF,17.80K,1%,1/8W,100PPM RN55D1782F	886174	4
R95,99,118	RES,MF,14.70K,1%,1/8W,100PPM RN55D1472F OR EQUAL	810203	3
R96,100,120,125	RES,MF,2.26K,1%,1/8W,100PPM RN55D2261F OR EQUAL	810204	4
TP1-TP31,JP1	CONN,HDR,POST,.025 SQUARE * 87022-9,AMP ONLY,MOD2MACH.APPL	880007	33
U1	IC,SW,4-SPST,Ron175,W/DRIVERS 211,DG211CJ,HAR	886001	1
U10	IC,REF,+2.5V,10PPM/C,TO-52 580,AD580LH,AD	810142	1
U11	IC,OPAMP,HI-VOLT,SR40V/us,TO-3 41,PA41A,APEX	810151	1

Table 6-4. Analog Board Assembly A3, Parts List (Cont'd)

REFERENCE DESIGNATORS	DESCRIPTION / VENDOR PART NO.	NAI PART NO.	QTY
U12	IC,SW,4-SPST,0-OFF,1-ON 445,DG445DJ,SILICONIX	810131	1
U14	IC,COMP,DUAL,HI-SPEED 319,LM319N,NAT	883244	1
U15	IC,OPAMP,SR300V/us,LO-PWR 847,AD847JN,AD	810146	1
U16	IC,SW,2-SPST,1-N.C.,1-N.O. 613,DG613DJ,SILICONIX	810132	1
U17,U32	IC,RDC,DIP,8-PIN 736,AD736JN,AD	810145	2
U19	IC,REG,-ADJ,1.5A,TO-220,3TERM 337,LM337T,NAT	889941	1
U2,U23	IC,SW,MUX,8-1,ANALOG,16PINDIP 408,DG408DJ,SILICONIX	810149	2
U20	IC,OPAMP,SR60V/us,GBW30MHz,DIP 17,OP17EZ,PMI	810289	1
U21	IC,REG,+ADJ,1.5A,TO-220,3TERM 317,LM317T,NAT	889940	1
U22,31,41	IC,OPAMP,DUAL,SR3V/us,Vos.5mV 5102,HA3-5102-5,HAR	889008	3
U26	IC,MDAC,12-BIT,PAR-LOAD,DIP24P 7847,AD7847AN,AD	810148	1
U28,36,37,45	IC,CMOS,FLIP-FLOP,D,OCTAL,EDGE 574,SN74HCT574N,SN74HCT574E,TI	889011	4
U29,30,38,39	IC,OPAMP,DUAL,SR16V/us,Vos.3mV 712,AD712JN,AD	810144	4
U3,U33	IC,OPAMP,SR17V/usGBW63M,Vos10u 37,OP37EP,PMI	810136	2
U34	IC,ADC,10-BIT,SAMPLING,20us 7580,AD7580KN,AD	810147	1
U35	IC,INTERFACE,DRIVER,8-CHANNEL 2803,ULN2803A,MOT,ALLEGRO	889911	1
U4,5,6,7,13,24,25,27,50	IC,OPAMP,SR2.8V/usGBW8M,Vos10u 27,OP27EP,PMI	810135	9

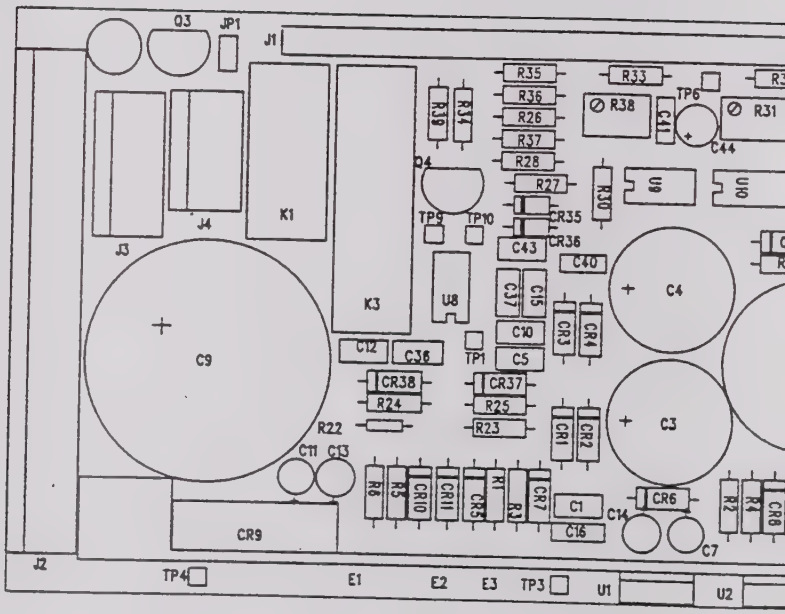
Q3
JP1
J1
R35
R36
R26
R37
R28
R33
TP6
R38
C41
C44
R31
R39
R34
Q4
R27
R30
U9
U10
TP9
TP10
CR35
CR36
C43
C40
J3
J4
K1
K3
U8
C37
C15
C10
C5
CR3
CR4
C4
C9
C12
C38
TP1
CR38
R24
CR37
R25
R23
R22
C11
C13
CR1
CR2
C3
R6
R5
CR10
CR11
CR5
R1
R3
CR7
C1
C16
C14
CR6
R2
R4
CR8
C7
CR9
J2
TP4
E1
E2
E3
TP3
U1
U2

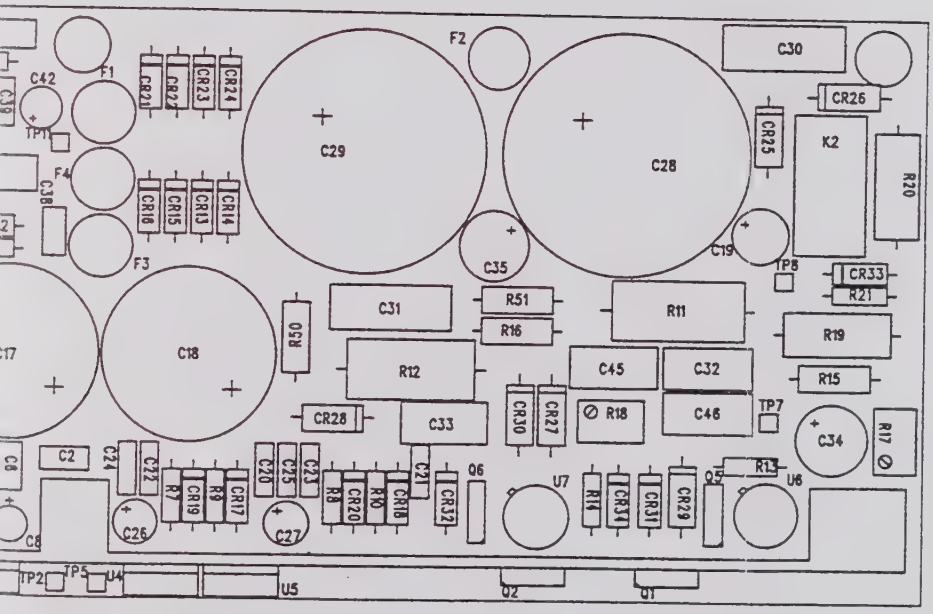

Fig. 6-5. Main Power Supply Assembly

Table 6-4. Analog Board Assembly A3, Parts List (Cont'd)

REFERENCE DESIGNATORS	DESCRIPTION / VENDOR PART NO.	NAI PART NO.	QTY
U40	IC,REG,+5V,0.1A,TO-92,3-TERM 05,LM78L05ACZ,NAT OR EQUAL	810141	1
U42	IC,OPAMP,QUAD,SR35V/us,GBW6.4M 404,OPA404KP,BB ONLY	887660	1
U43	VACTROL (RAYSISTOR) VTL5C4,EG&G	810451	1
U44	IC,COMP,Vos2m,Ios6mA 311,LM311N,NAT OR =	808302	1
U46,U48	IC,DAC,14-BIT,COMPLETE,LC^2MOS 7840,AD7840KN,AD ^	810288	2
U47	IC,REG,-5V,TO-92 79L05,UA79L05ACZ	884919	1
U49	IC,SW,2 SPDT,LO-PWR,HI-SPD 403,DG403DJ,HARRIS ONLY	810954	1
U8	IC,OPAMP,SR100V/us,GBW16MHz 845,AD845KN,AD ^	810129	1
U9,U18	IC,OPAMP,SR.3V/us,Vos50uV 707,AD707JN,AD ^	810143	2
Z1	RES,NET REV.B ^	810105	1

Table 6-5. Main Power Supply Assembly A4, Parts List

REFERENCE DESIGNATORS	DESCRIPTION / VENDOR PART NO.	NAI PART NO.	QTY
C1,2,5,6,10,12,15,36,37,38,39,43	CAP,CER,.1UF,50V,20%,Z5U,RADIA SR215E104MAA - AVX ONLY	886063	12
C11	CAP,TANT-POL,4.7UF,25V,+-20% NDTM475K25N,NIC	886059	1
C13,C14	CAP,TANT-POL,10UF,25V,+-20% NDTM106K25,NIC OR EQUAL	886060	2
C16,24,25	CAP,CER,.01UF,200V,10% CK06BX103K ^	810164	3
C17,C18	CAP,AL-EL,2200UF,100V30x50SNAP ECES2A222N,PANASONIC ^	810309	2
C19	CAP,AL-EL,3.3UF,160V,RADIAL 335CKR160M,ILLINOIS CAP	810240	1
C20,21,22,23	CAP,CER,.1UF,100V,+-10% CK06BX104K ^	880640	4
C26,C27	CAP,AL-EL,10UF,100V,20% 106CKR100M,ILLINOIS	810158	2
C28,C29	CAP,AL-EL,470UF,400V,35x40SNAP LPX471M400H7P3,MALLORY ^	810308	2
C3,C4	CAP,AL-EL,3300UF,50V18x40RADIA NRSS332M50V,NIC	810310	2
C30,31	CAP,FILM,.1UF,400V,10%,POLYSTR 104MSR400K,ILLINOIS CAP	810166	2
C32,33,45	CAP,FILM,.1UF,250V,10%,POLYSTR 104MSR250K,ILLINOIS CAP	810165	3
C34,C35	CAP,AL-EL,10UF,250V,20% 106CKR250MPX,ILLINOIS CAP ^	885188	2
C40,41	CAP,CER,27PF,200V,+-10% CK05BX270K ^	808401	2
C42,C44	CAP,TANT-POL,6.8UF,35V,+-10% 199D685X9035DA1 SPRAGUE	884420	2
C7,C8	CAP,AL-EL,10UF,50V,RADIAL 106CKR050M,ILLINOIS CAP	810239	2
C9	CAP,AL-EL,47000UF,25V,40x50 ECO_S1EP473EA,PANASONIC ^	810345	1

Table 6-5. Main Power Supply Assembly A4, Parts List (Cont'd)

REFERENCE DESIGNATORS	DESCRIPTION / VENDOR PART NO.	NAI PART NO.	QTY
CR1,2,3,4,5,6,7,8,10,11,12,13,14,15,16,17,18,19,20,21,22 23,24,31,32,33,34	DIODE,SIG,PIV400V,1A 1N4004	803735	27
CR25,CR27	DIODE,ZENER,91V,5W,5% 1N5377B,MOTOROLA OR EQUAL	810311	2
CR26,CR28	DIODE,ZENER,100V,5W,5% 1N5378B,MOTOROLA OR EQUAL	810258	2
CR29,CR30	DIODE,ZENER,47V,5W,5% 1N5368B,MOTOROLA OR EQUAL	810260	2
CR35,CR36	DIODE,SIG,PIV75V,0.010A,4nS 1N4148 OR 1N4153	808974	2
CR37,CR38	DIODE,RECT,PIV50V,1A 1N4001,MOTOROLA	804477	2
CR9	DIODE,BRIDGE,RECT,PIV50V,4A MDA970A1,DIODES INC.- RS601	884735	1
F1,2	FUSE,0.125A,250V,FAST-BLO 263.125,LITTLEFUSE	810405	2
F3,F4	FUSE,0.75A,125V,MICRO,VERYFAST 273.750,LITTLEFUSE	810350	2
J1	ASSY,CABLE POWER SUPPLY 5300	549006	1
J2	CONN,HDR,18-POS,LKG.W/KEY,156C 26-60-4180,MOLEX	810314	1
J3	CONN,HDR,5-POS,LKG.W/KEY,156CN 26-60-4050,MOLEX	810315	1
J4	CONN,HDR,4-POS,LKG.W/KEY,156CN 26-60-4040,MOLEX	810316	1
K1	RELAY,2 FORM C,5VDC,5A,FLATPAK NC2D-P-DC5,AROMAT OR =	810262	1
K2	RELAY,2 FORM C,48V,1A,PCB MR602-48USR,RA-48W-K,NEC,NC/NR	810243	1
K3	RELAY,4 FORM C,5VDC,5A,FLATPAK NC4D-P-DC5,AROMAT OR EQUAL	810263	1
Q1,Q5	XSTR,PWR,NPN,300V,20W,0.5A MJE340,MOTOROLA,TO-225AA	810156	2

Table 6-5. Main Power Supply Assembly A4, Parts List (Cont'd)

REFERENCE DESIGNATORS	DESCRIPTION / VENDOR PART NO.	NAI PART NO.	QTY
Q2,Q6	XSTR,PWR,PNP,300V,20W,0.5A MJE350,MOTOROLA,TO-225AA	810157	2
Q3,Q4	XSTR,MOSFET,N-CH,30V,RdsON1.2 VN0300M,SILICONIX ONLY,TO-237	886496	2
R1,R2	RES,MF,14K,1%,1/8W,100PPM RN55D1402F	810357	2
R11,R12	RES,CMPSN,18K,5%,2W HB1835,ALLEN BRADLEY OR EQUAL^	810313	2
R13,R14	RES,MF,182 OHM,1%,1/8W,100PPM RN55D1820F	810312	2
R15,R16,R50,R51	RES,MF,23.20K,1%,2W,100PPM CPF-2-2322F-T-1,DALE OR =	810265	4
R17,R18	RES,VAR,2K, 3299W-1-202 RJ24FW202,BOURNS	810192	2
R19,R20	RES,WW,7.50K,5%,3W VC3D-7500or3X7500 W/L,CLAROSTA	802271	2
R21	RES,MF,0.10,OHM,2%,1/8W,200PPM CMF-55-R10-G-T-00,DALE OR =	810244	1
R23	RES,MF,2.74K,1%,1/8W,100PPM RN55D2741F ^	810173	1
R24	RES,MF,59K,1%,1/8W,50PPM RN55C5902F ^	808184	1
R25	RES,MF,374 OHM,1%,1/8W,100PPM RN55D3740F	803557	1
R26	RES,MF,340 OHMS,1%,1/8W,100PPM RN55D3400F,DALE OR =	810246	1
R27,R28	RES,MF,5.90K,1%,1/8W,50PPM RN55C5901F ^	805861	2
R29,R30	RES,CMPSN,62K,5%,1/4W RCR07G623JS,RLR07C6202GS	802082	2
R3,R4,R22	RES,MF,1.37K,1%,1/8W,100PPM RN55D1371F ^	810197	3
R31,R38	RES,VAR,5K,10%,1/2W,TRIM,25TRN 3299W-1-502,BOURNS	883066	2

Table 6-5. Main Power Supply Assembly A4, Parts List (Cont'd)

REFERENCE DESIGNATORS	DESCRIPTION / VENDOR PART NO.	NAI PART NO.	QTY
R32,R36	RES,MF,27.40K,1%,1/8W,50PPM RN55C2742F	808098	2
R33,35	RES,MF,115K,1%,1/8W,100PPM RN55D1153F	886128	2
R34	RES,MF,1.30K,1%,1/4W,100PPM RN60D1301F	805640	1
R37	RES,CMPSN,3.30K,5%,1/4W RCR07G332JS,RLR07C3301GS ^	803388	1
R39	RES,MF,3.74K,1%,1/8W,100PPM RN55D3741F	810352	1
R5	RES,MF,115 OHM,1%,1/10W,25PPM	RNC55J1150FS	1
R6	RES,MF,0.383 OHM,0.5%,1/4W,50P RN60C3830D or RNC60H3830BS	886169	1
R7,R8	RES,MF,30.90K,1%,1/10W,100PPM RN55D3092F ^	807423	2
R9,R10	RES,MF,866 OHMS,1%,1/8W,100PPM RN55D8660F	810247	2
TP1-TP11,JP1	CONN,HDR,POST,.025 SQUARE * 87022-9,AMP ONLY,MOD2MACH.APPL	880007	13
U1,U4	IC,REG,+ADJ,1.5A,TO-220,3TERM 317,LM317T,NAT	889940	2
U10	IC,COMP,QUAD,LO-PWR,LO-Vos 339,LM339N,NAT	807626	1
U2,U5	IC,REG,-ADJ,1.5A,TO-220,3TERM 337,LM337T,NAT	889941	2
U3	IC,REG,+ADJ,10A,TO-3 1038,LT1038MK,LT	810155	1
U6	IC,REG,+ADJ,1.5A,TO-39,3-TERM 317,LM317HVH,NAT	810153	1
U7	IC,REG,-ADJ,1.5A,TO-39,3TERM 337,LM337HVH,NAT ^	810154	1
U8,U9	IC,OPAMP,SR17V/usGBW63M,Vos10u 37,OP37EP,PMI	810136	2

Table 6-5. Main Power Supply Assembly A4, Parts List (Cont'd)

REFERENCE DESIGNATORS	DESCRIPTION / VENDOR PART NO.	NAI PART NO.	QTY
XF1,XF2,XF3,XF4	FUSEHOLDER,MICRO/SUB-MIN,PC MT 281.008,LITTLEFUSE	810351	4
XU6,7	TRANSIPAD,TO-5 THERMALLOY 7717-79N	882407	2

Q1
Q2
Q3
Q4
J1
Q5
Q6

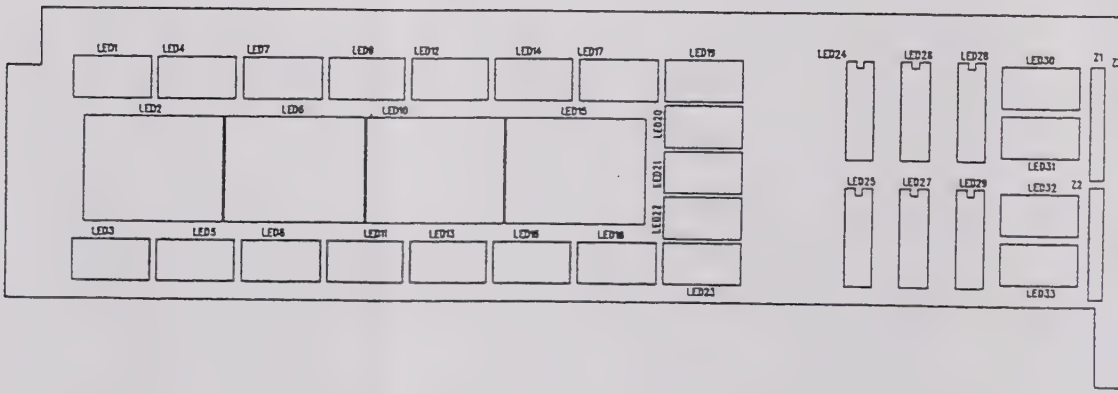
LED1
LED4
LED7
LED9
LED12
LED14
LED17
LED19
LED2
LED6
LED10
LED15
LED20
LED21
LED22
LED3
LED5
LED8
LED11
LED13
LED16
LED18
LED23
LED24
LED26
LED28
LED30
LED31
Z1
LED25
LED27
LED29
LED32
LED33
Z2

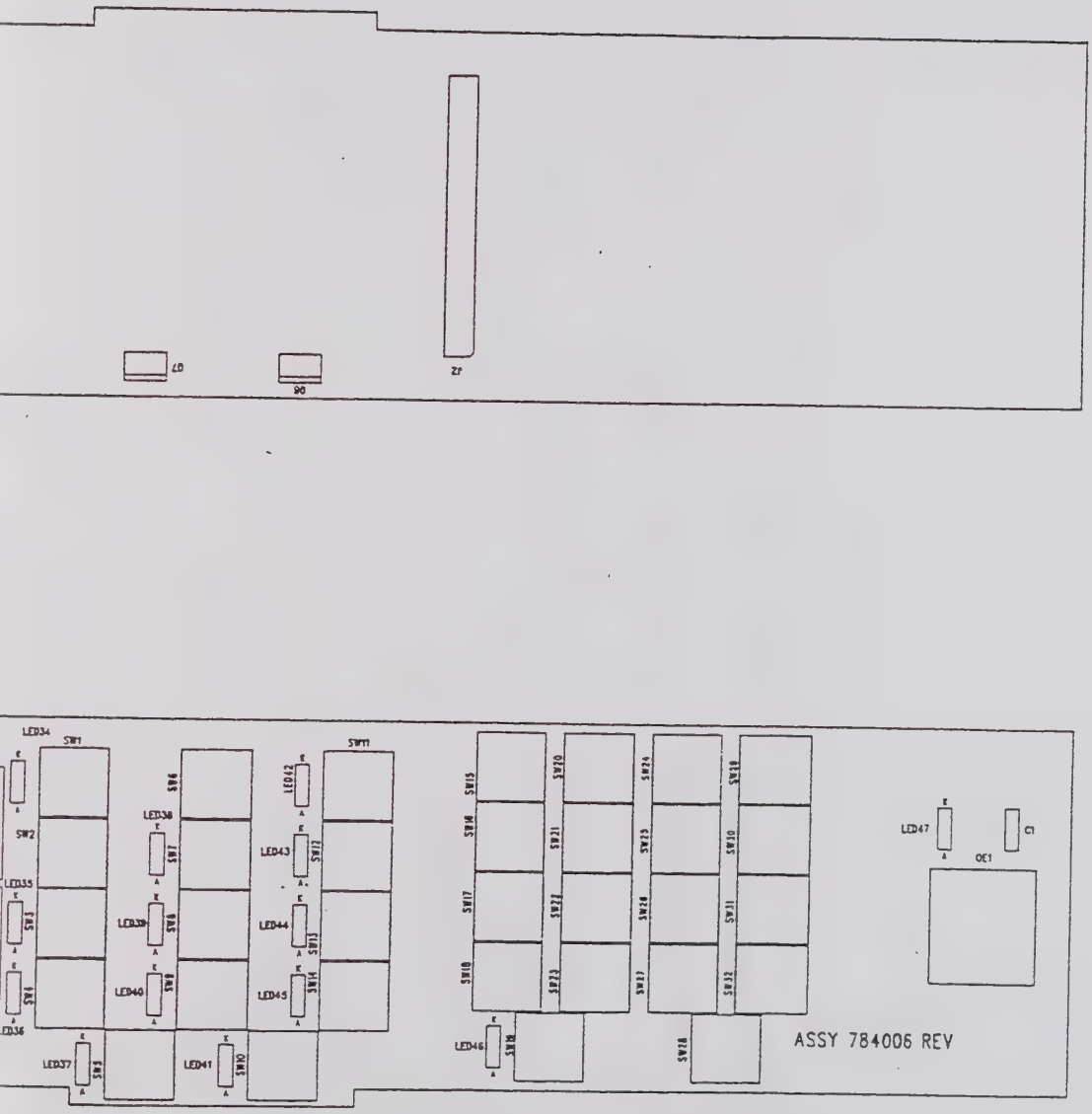

Fig. 6-6. Display/Keyboard Assembly

Table 6-6. Display/Keyboard Assembly A5, Parts List

REFERENCE DESIGNATORS	DESCRIPTION / VENDOR PART NO.	NAI PART NO.	QTY
C1	CAP,CER,1UF,50V,+-10% CK06BX105K ^	805155	1
J1,J2	CONN,HDR,40-POS,DBL.ROW TSW-120-07-L-D,SAMTEC	810286	2
LED1,3,4,5,7-9,11-14,16-23,30-33	DGTL/DSPL,LED,10,RED LTL-57173,LITTON,MV57173,QT	886043	23
LED2,6,10,15	LED DISPLAY,.56 DUAL,LED LTD6940HR	887339	4
LED24-29	LED,0.3IN SINGLE,SEE DWG I/A/W NAI DRAWING	887340	6
LED34-47	LED,HER,RECTANGULAR,5V@20mA HLMP-0301,HP	810282	14
OE1	OPTICAL ENCODER HRPG-AD32#16F,HP	810281	1
Q1-8	XSTR,MOSFET,N.CH,40W,Vbr60 MTP3055EL,MOTOROLA,TO-220AB ^	810283	8
SW1-32	SW,PB,MOMEMTARY DSKA03A,GRAYHILL	810285	32
XLED24-29	SOCKET,IC,14-POS,DIP,100x300SP ICT-143-SP122-TT,R. NUGENT ^	810413	6
Z1-4	RES,NET,ISO,SIP,33 OHMX4,8P,1W 4608M-102-330 or 4608X-102-330	810284	4

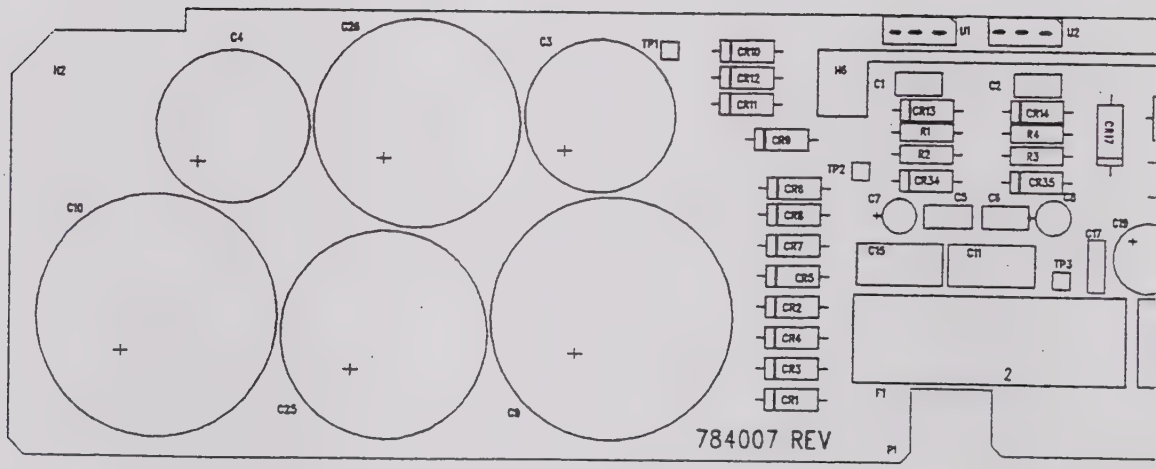
784007 REV

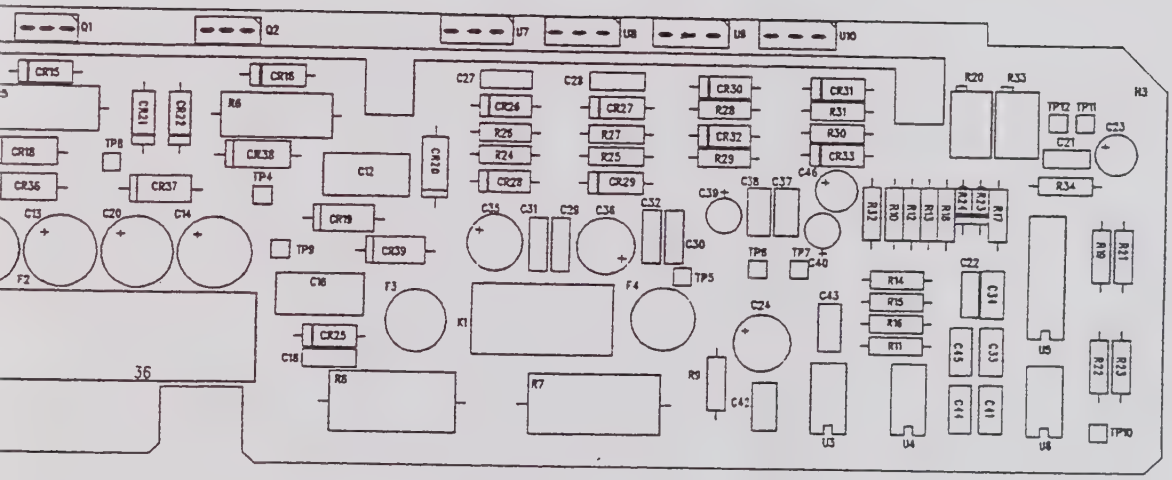

Fig. 6-7. Isolated Power Supply Assembly

Table 6-7. Isolated Power Supply AssemblyA6, A7, Parts List

REFERENCE DESIGNATORS	DESCRIPTION / VENDOR PART NO.	NAI PART NO.	QTY
C1,2,5,6,33,34,37,38,41,42,43,44,45	CAP,CER,.1UF,50V,20%,Z5U,RADIA SR215E104MAA - AVX ONLY	886063	13
C11,12,15,16	CAP,FILM,.1UF,250V,10%,POLYSTR 104MSR250K,ILLINOIS CAP	810165	4
C13,14,19,20	CAP,AL-EL,10UF,250V,20% 106CKR250MPX,ILLINOIS CAP ^	885188	4
C17,18,31,32	CAP,CER,.01UF,200V,10% CK06BX103K ^	810164	4
C21,C22	CAP,CER,27PF,200V,+-10% CK05BX270K ^	808401	2
C23,C46	CAP,TANT-POL,6.8UF,35V,+-10% 199D685X9035DA1 SPRAGUE	884420	2
C24	CAP,AL-EL,3.3UF,160V,RADIAL 335CKR160M,ILLINOIS CAP	810240	1
C25,C26	CAP,AL-EL,2200UF,100V30x30SNAP ECO_S2AP222DA,PANASONIC ^	810325	2
C27,28,29,30	CAP,CER,.1UF,100V,+-10% CK06BX104K ^	880640	4
C3,C4	CAP,AL-EL,3300UF,50V,22x35SNAP ECO_S1HA332BA,PANASONIC ^	810324	2
C35,C36	CAP,AL-EL,10UF,100V,20% 106CKR100M,ILLINOIS	810158	2
C7,8,39,40	CAP,AL-EL,10UF,50V,RADIAL 106CKR050M,ILLINOIS CAP	810239	4
C9,C10	CAP,AL-EL,820UF,250V,35x35SNAP 827LBA250M2EE,ILLINOIS CAP	810276	2
CR1-CR16,CR21,CR22,CR25-CR35	DIODE,SIG,PIV400V,1A 1N4004	803735	29
CR17,18,19,20	DIODE,ZENER,39V,5W,5% 1N5366B,MOTA	810347	4
CR23,CR24	DIODE,SIG,PIV75V,0.010A,4nS 1N4148 OR 1N4153	808974	2
CR36,37,38,39	DIODE,ZENER,36V,5W,5% 1N5365B,MOTA	810346	4

Table 6-7. Isolated Power Supply AssemblyA6, A7, Parts List (Cont'd)

REFERENCE DESIGNATORS	DESCRIPTION / VENDOR PART NO.	NAI PART NO.	QTY
F1,F2	FUSE,0.1A,250V,3AG,FAST ACTING 312.100,LITTLEFUSE OR EQUAL	810261	2
F3,F4	FUSE,0.75A,125V,MICRO,VERYFAST 273.750,LITTLEFUSE	810350	2
K1	RELAY,2 FORM C,48V,1A,PCB MR602-48USR,RA-48W-K,NEC,NC/NR	810243	1
Q1	XSTR,PWR,NPN,300V,20W,0.5A MJE340,MOTOROLA,TO-225AA	810156	1
Q2	XSTR,PWR,PNP,300V,20W,0.5A MJE350,MOTOROLA,TO-225AA	810157	1
R1,4,28,31	RES,MF,1.37K,1%,1/8W,100PPM RN55D1371F ^	810197	4
R10	RES,MF,1.65K,1%1/10W,50PPM RNC55H1651FS ^	807075	1
R11	RES,MF,1.07K,1%,1/8W,100PPM RN55D1071F ^	810395	1
R12,R14,R15	RES,MF,14.70K,1%,1/8W,100PPM RN55D1472F OR EQUAL ^	810203	3
R13	RES,MF,374 OHM,1%,1/8W,100PPM RN55D3740F	803557	1
R16	RES,MF,340 OHMS,1%,1/8W,100PPM RN55D3400F,DALE OR =	810246	1
R17,R18	RES,CMPSN,62K,5%,1/4W RCR07G623JS,RLR07C6202GS	802082	2
R19,32	RES,MF,115K,1%,1/8W,100PPM RN55D1153F	886128	2
R2,R3	RES,MF,13.70K,1%,1/10W,100PPM RN55D1372F	885969	2
R21,R34	RES,MF,27.40K,1%,1/8W,50PPM RN55C2742F	808098	2
R22	RES,CMPSN,51K,5%,1/4W RCR07G513JS,RLR07C5102G	880559	1
R23	RES,CMPSN,10K,5%,1/4W, RLR07C1002GS ^	880092	1

Table 6-7. Isolated Power Supply AssemblyA6, A7, Parts List (Cont'd)

REFERENCE DESIGNATORS	DESCRIPTION / VENDOR PART NO.	NAI PART NO.	QTY
R24,R25	RES,MF,30.90K,1%,1/10W,100PPM RN55D3092F ^	807423	2
R26,R27	RES,MF,866 OHMS,1%,1/8W,100PPM RN55D8660F	810247	2
R29,R30	RES,MF,20K,1%,1/8W,50PPM RN55C2002F ^	810098	2
R5,R6	RES,CMPSN,1.50K,10%,1W RCR32G152J,RLR32C1501GM	803208	2
R50,51	RES,MF,23.20K,1%,2W,100PPM CPF-2-2322F-T-1,DALE OR =	810265	2
R7,R8	RES,WW,7.50K,5%,3W VC3D-7500or3X7500 W/L,CLAROSTA	802271	2
R9	RES,MF,0.10,OHM,2%,1/8W,200PPM CMF-55-R10-G-T-00,DALE OR =	810244	1
TP1,2,3,4,5,6,7,8,9,10,11,12	CONN,HDR,POST,.025 SQUARE * 87022-9,AMP ONLY,MOD2MACH.APPL	880007	12
U1,U7,U9	IC,REG,+ADJ,1.5A,TO-220,3TERM 317,LM317T,NAT	889940	3
U2,U8,U10	IC,REG,-ADJ,1.5A,TO-220,3TERM 337,LM337T,NAT	889941	3
U3,U4	IC,OPAMP,SR17V/usGBW63M,Vos10u 37,OP37EP,PMI	810136	2
U5	IC,COMP,QUAD,LO-PWR,LO-Vos 339,LM339N,NAT	807626	1
U6	IC,OPTOCOUPLER,HI-GAIN DARLNGT 6N139,HP	884460	1
XF1,XF2	FUSE-BLOCK,3AG,1POLE,PC15A300V 354.101GY,LITTLEFUSE	810349	2
XF3,XF4	FUSEHOLDER,MICRO/SUB-MIN,PC MT 281.008,LITTLEFUSE	810351	2

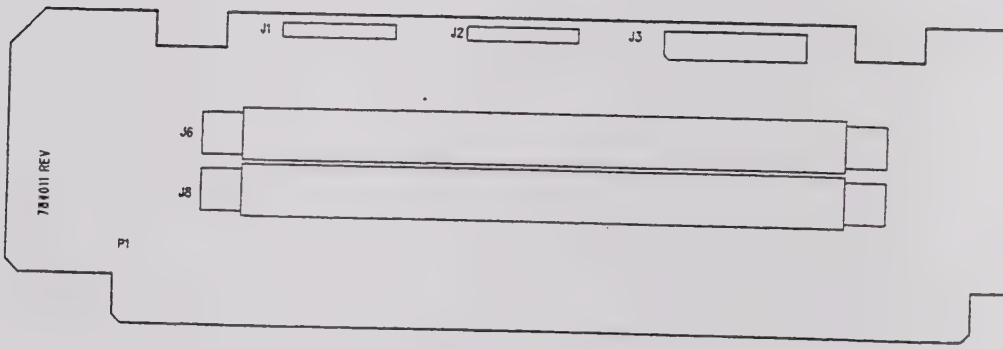
J1
J2
J3
J6
J8
784011 REV
P1

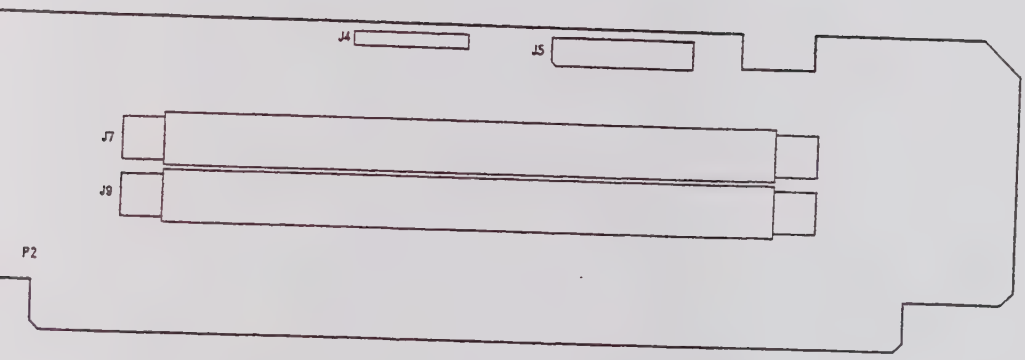

Fig. 6-8. Interconnect Board Assembly

Table 6-8. Analog Interconnection Board Assembly A8, Parts List

REFERENCE DESIGNATORS	DESCRIPTION / VENDOR PART NO.	NAI PART NO.	QTY
J1,J2,J3,J4,J5	CONN,HDR,POST,.025 SQUARE * 87022-9,AMP ONLY,MOD2MACH.APPL	880007	64
J6,J7,J8,J9	CONN,EDGE,40-POS,DBL.READ,100C EZC40DCSD or EZC40DCWD,SULLINS	810236	4

CHAPTER 7
DIAGRAMS

7.1 GENERAL

This chapter contains the schematic diagrams for the Resolver/Synchro Standard (RSS). These diagrams supplement Chapter 4, Principles of Operation, and are used when performing maintenance for the RSS.

7.2 DIAGRAMS

Table 7-1 lists and describes the diagrams for the RSS.

Note

The upper R/H corner of the drawing contains the revision of the drawing. Refer to this revision if you need to discuss maintenance with the manufacturer.

Table 7-1. RSS Resolver/Synchro Standard Diagrams

FIGURE NO.	NOMENCLATURE	NAI DRAWING NO.
7-1	System Board A1, Schematic Diagram	770007
7-2	Sine/Cosine Board A2, Schematic Diagram	770001
7-3	Analog Board A3, Schematic Diagram	770006
7-4	Main Power Supply Assembly A4, Schematic Diagram	770009
7-5	Display/ Keyboard Assembly A5, Schematic Diagram	770000
7-6	Isolated Power Supply A6, A7, Schematic Diagram	770010
7-7	Analog Interconnect Board A8, Schematic Diagram	770008
7-8	Analog Card Cage Extender, Schematic Diagram	770011

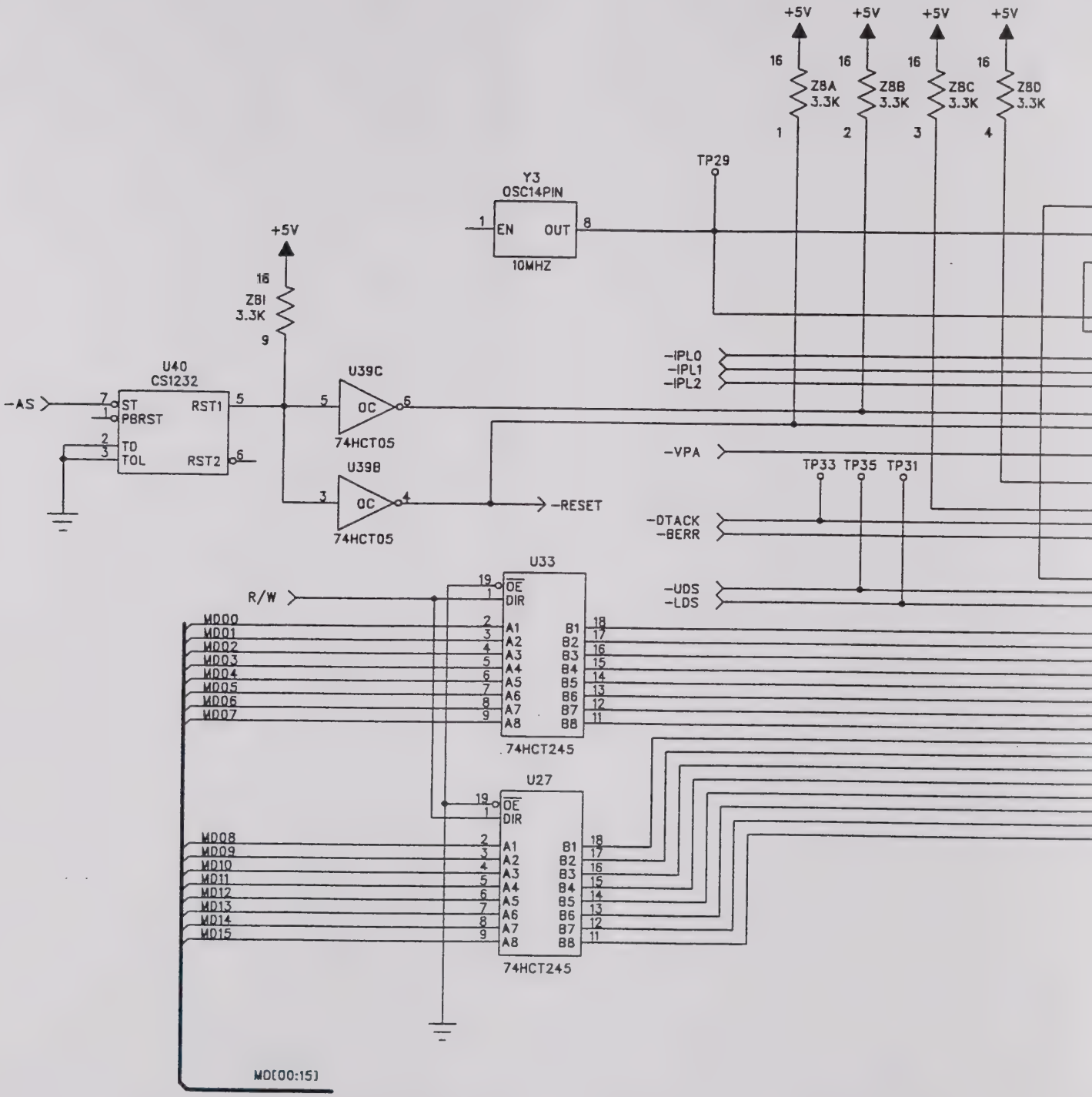
+5V
+5V
+5V
+5V
16
16
16
16
Z8A 3.3K
Z8B 3.3K
Z8C 3.3K
Z8D 3.3K
1
2
3
4
TP29
Y3
OSC14PIN
1
EN
OUT
8
10MHZ
+5V
16
Z8I 3.3K
9
U40
CS1232
-AS
7
ST
1
PBRST
2
3
TD
TOL
RST1
RST2
5
6
U39C
OC
74HCT05
U39B
OC
74HCT05
-RESET
-IPL0
-IPL1
-IPL2
-VPA
TP33
TP35
TP31
-DTACK
-BERR
-UDS
-LDS
U33
R/W
19
OE
1
DIR
MD00
MD01
MD02
MD03
MD04
MD05
MD06
MD07
2
3
4
5
6
7
8
9
A1
A2
A3
A4
A5
A6
A7
A8
B1
B2
B3
B4
B5
B6
B7
B8
18
17
16
15
14
13
12
11
74HCT245
U27
MD08
MD09
MD10
MD11
MD12
MD13
MD14
MD15
MD[00:15]

REVISIONS				
ZONE	LTR	DESCRIPTION	DATE	APPROVED
	C	ADDED BYPASS TO DSP	8/29/94	PVR
	D	REV PER ECN 33199	12/12/94	MDP
	E	REV PER ECN 33412	5/15/95	MDP
	F	REV PER ECN 34113	6/20/96	PVR
	G	REV PER ECN 34883	4/4/97	PVR
	H	REV PER ECN 35099	6/16/97	

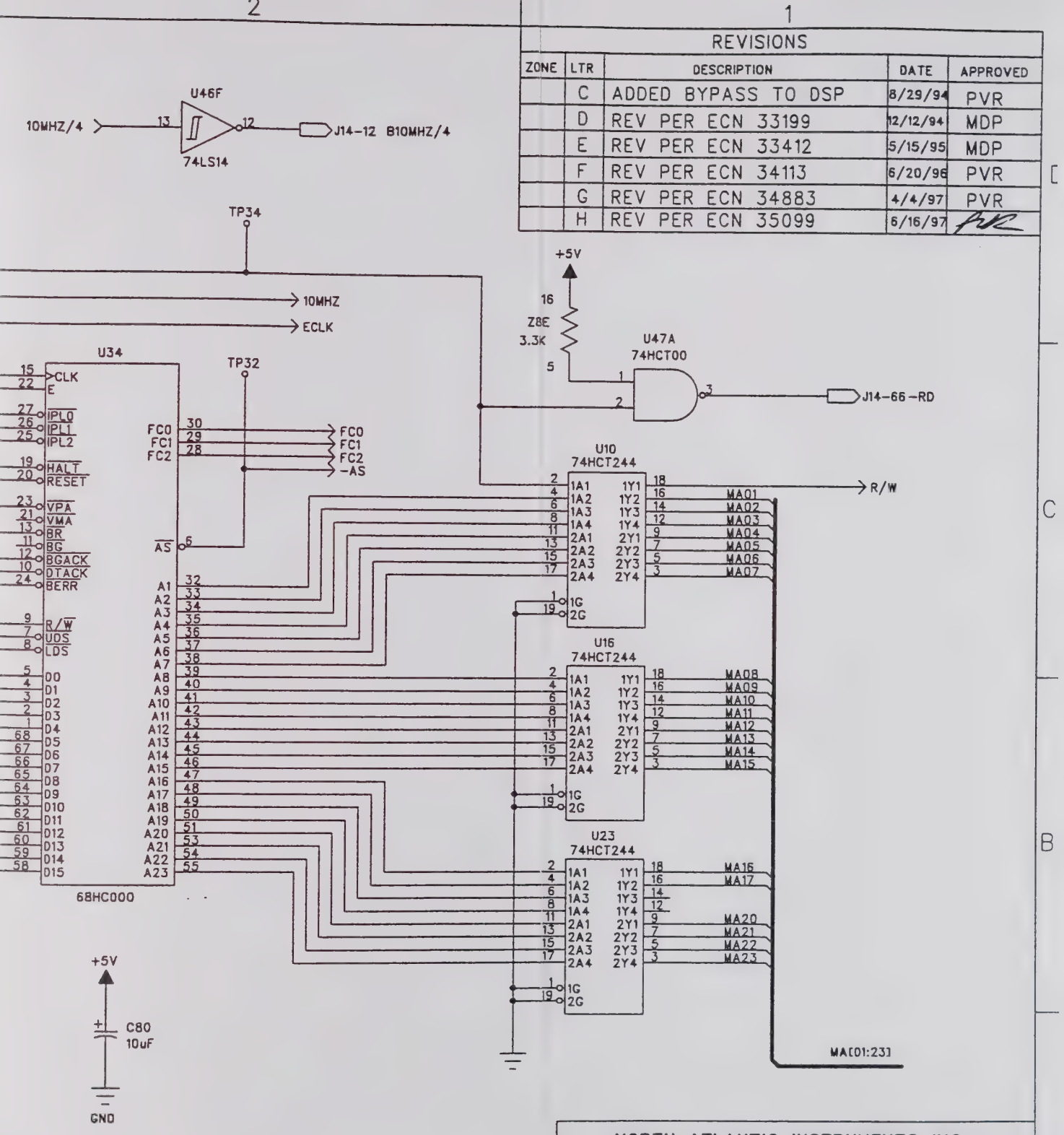

NORTH ATLANTIC INSTRUMENTS INC.	
SCHEMATIC DIAGRAM 5300 SYSTEM BOARD	
784009	5300
NEXT ASSY	USED ON

SIZE		SHEET	REV
B	770007	1 OF 13	H

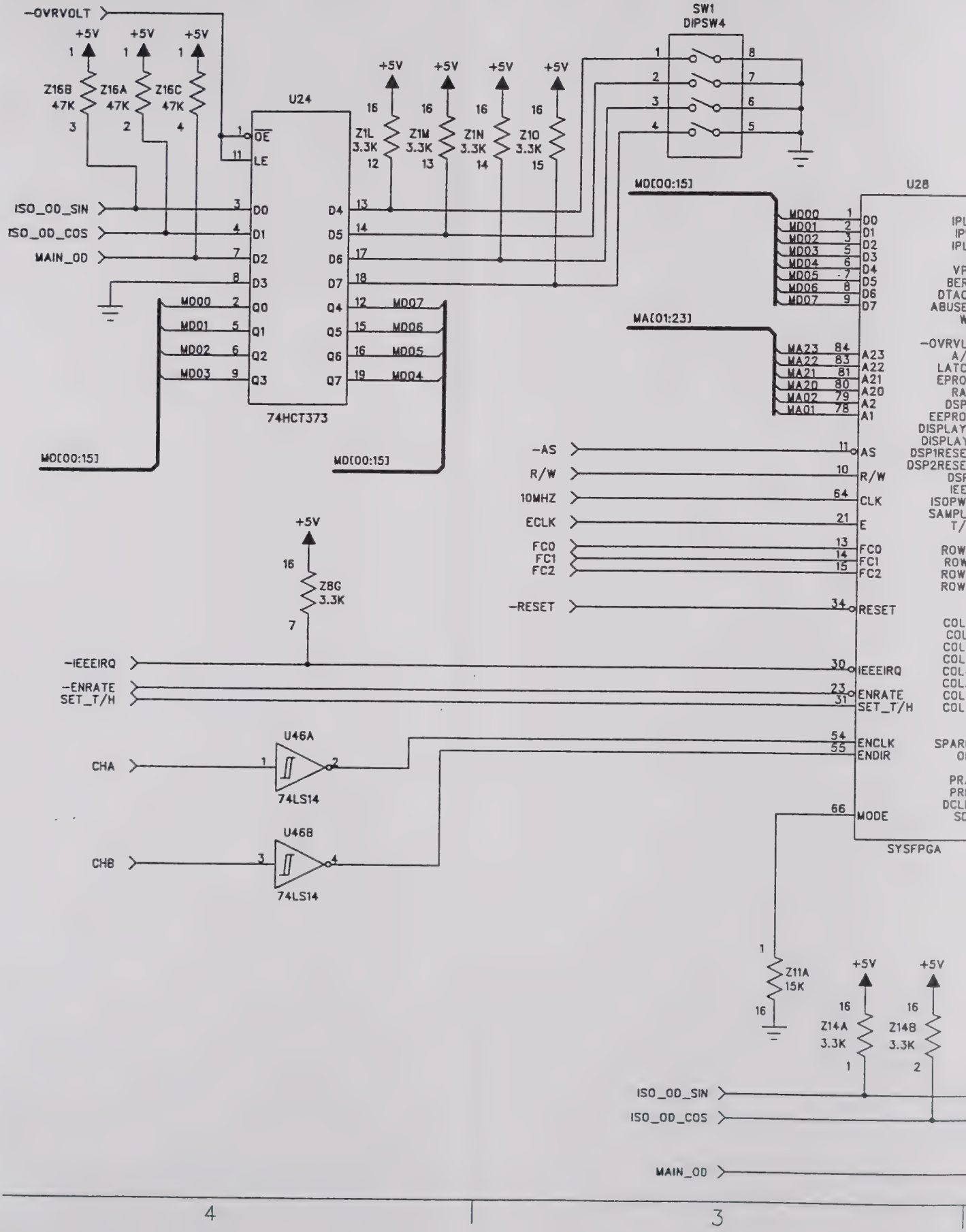
4
3
-OVRVOLT
+5V
Z16B 47K
Z16A 47K
Z16C 47K
U24
OE
LE
ISO_OD_SIN
ISO_OD_COS
MAIN_OD
D0
D1
D2
D3
D4
D5
D6
D7
Q0
Q1
Q2
Q3
Q4
Q5
Q6
Q7
MD00
MD01
MD02
MD03
MD04
MD05
MD06
MD07
74HCT373
MD[00:15]
Z1L 3.3K
Z1M 3.3K
Z1N 3.3K
Z1O 3.3K
SW1
DIPSW4
U28
MA[01:23]
MA23
MA22
MA21
MA20
MA02
MA01
A23
A22
A21
A20
A2
A1
-AS
R/W
10MHZ
ECLK
FC0
FC1
FC2
-RESET
AS
CLK
E
RESET
Z8G 3.3K
-IEEEIRQ
-ENRATE
SET_T/H
IEEEIRQ
ENRATE
U46A
U46B
CHA
CHB
74LS14
ENCLK
ENDIR
MODE
SYSFPGA
Z11A 15K
Z14A 3.3K
Z14B 3.3K
ISO_OD_SIN
ISO_OD_COS
MAIN_OD

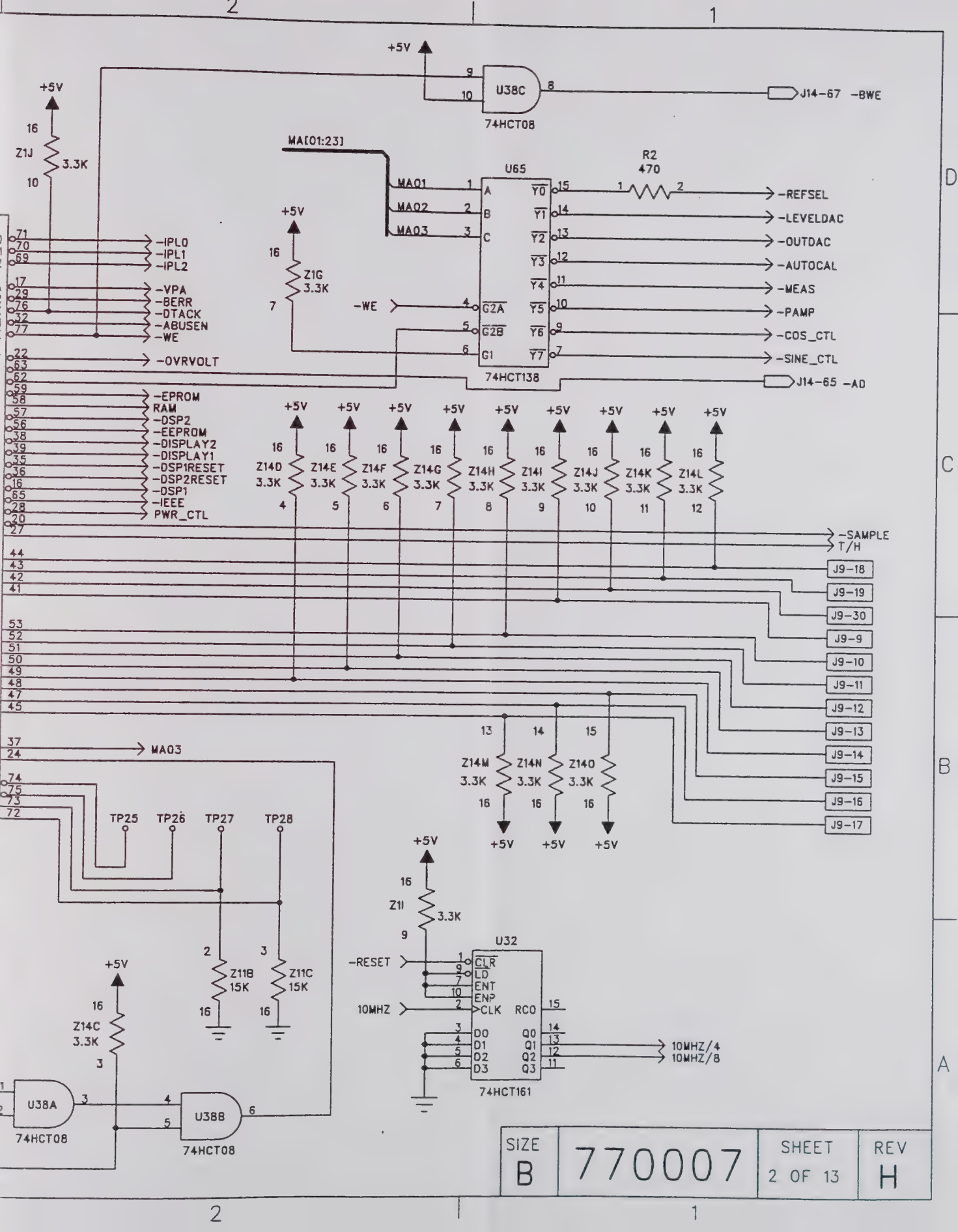

SIZE		SHEET	REV
B	770007	2 OF 13	H

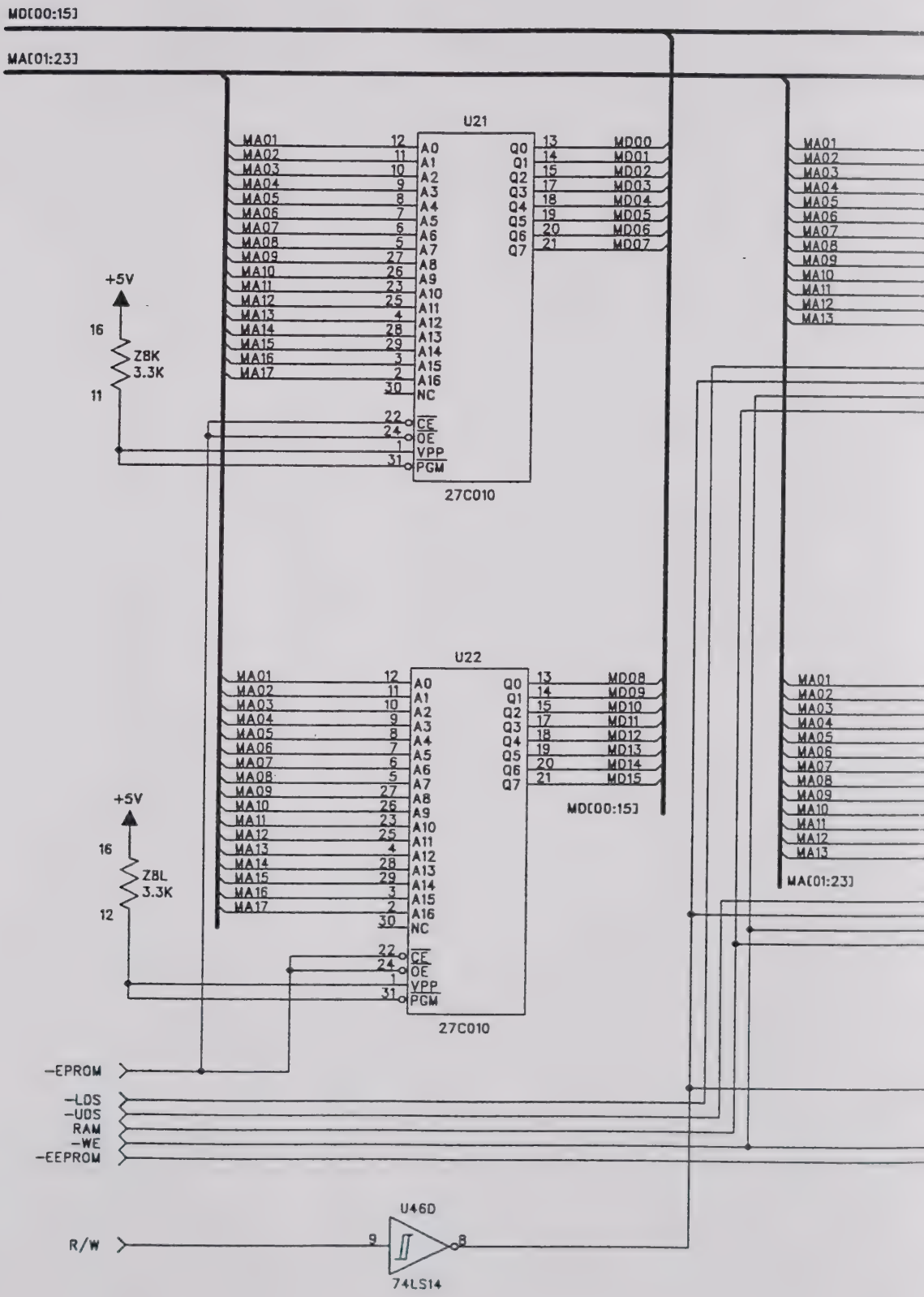
MD[00:15]
MA[01:23]
U21
MA01
MA02
MA03
MA04
MA05
MA06
MA07
MA08
MA09
MA10
MA11
MA12
MA13
MA14
MA15
MA16
MA17
A0
A1
A2
A3
A4
A5
A6
A7
A8
A9
A10
A11
A12
A13
A14
A15
A16
NC
CE
OE
VPP
PGM
Q0
Q1
Q2
Q3
Q4
Q5
Q6
Q7
MD00
MD01
MD02
MD03
MD04
MD05
MD06
MD07
27C010
+5V
Z8K
3.3K
U22
MD08
MD09
MD10
MD11
MD12
MD13
MD14
MD15
Z8L
3.3K
-EPROM
-LDS
-UDS
RAM
-WE
-EEPROM
U46D
R/W
74LS14

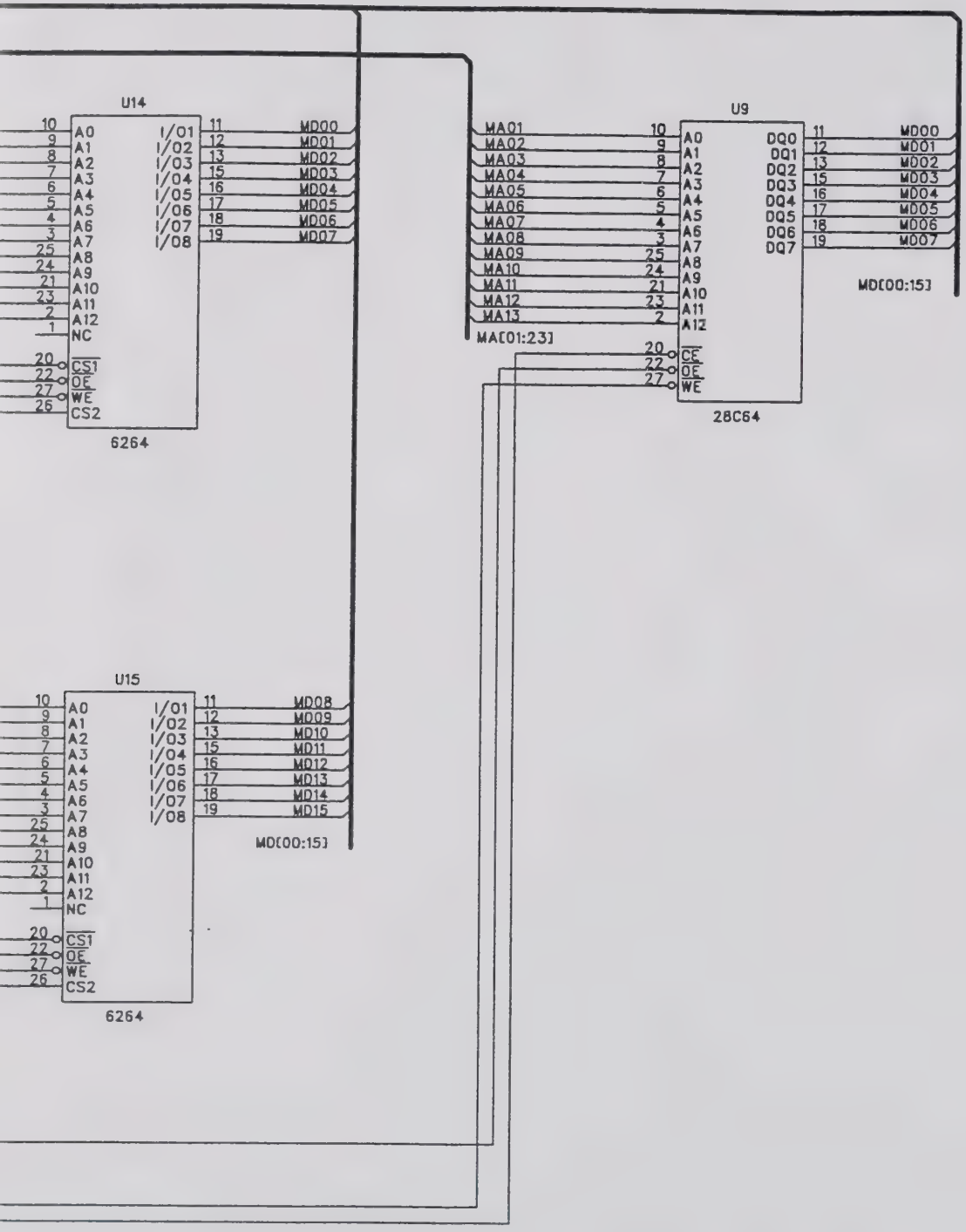

SIZE		SHEET	REV
B	770007	3 OF 13	H

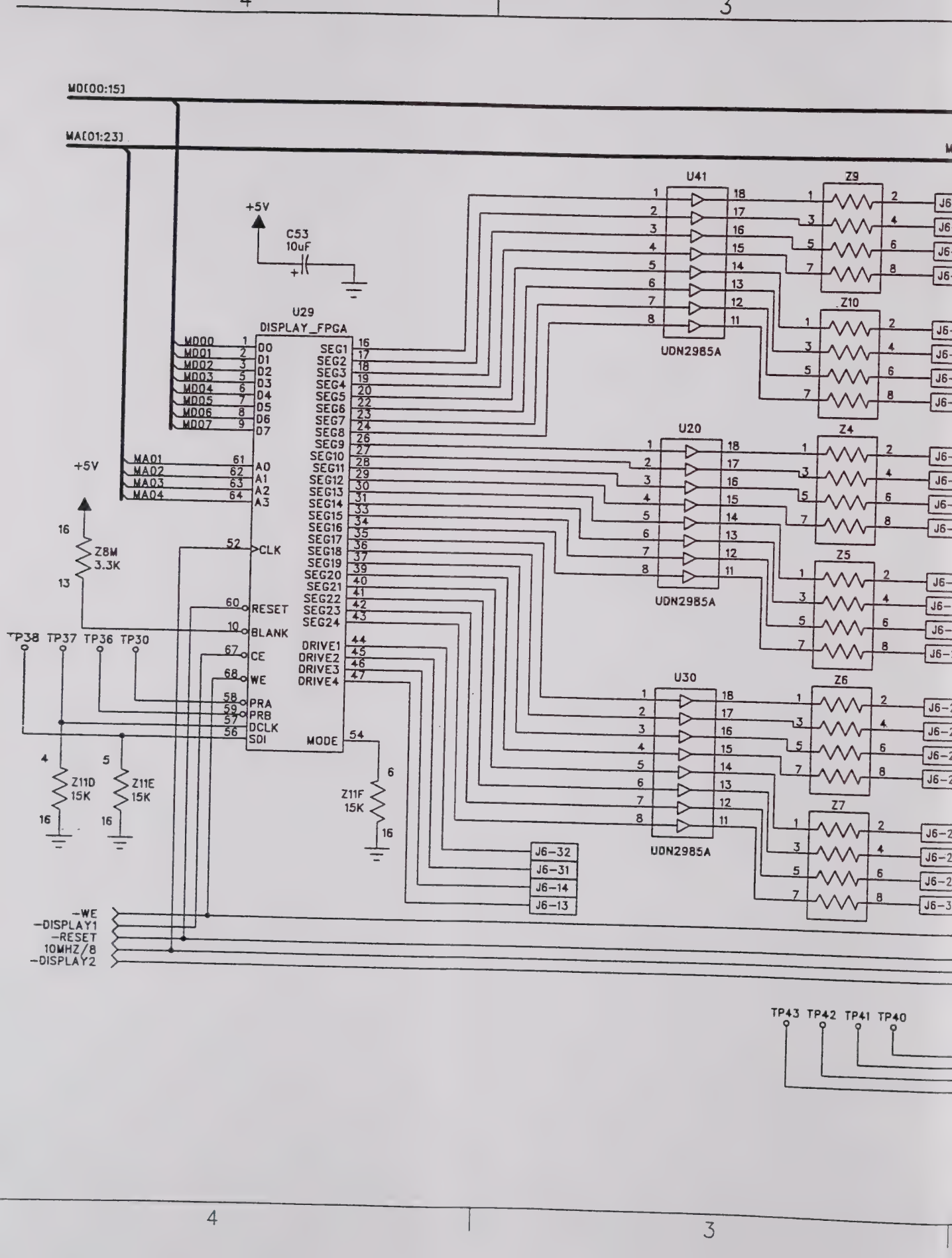
MD[00:15]
MA[01:23]
+5V
C53
10uF
U29
DISPLAY_FPGA
MD00
MD01
MD02
MD03
MD04
MD05
MD06
MD07
D0
D1
D2
D3
D4
D5
D6
D7
MA01
MA02
MA03
MA04
A0
A1
A2
A3
CLK
RESET
BLANK
CE
WE
PRA
PRB
DCLK
SDI
MODE
SEG1
SEG2
SEG3
SEG4
SEG5
SEG6
SEG7
SEG8
SEG9
SEG10
SEG11
SEG12
SEG13
SEG14
SEG15
SEG16
SEG17
SEG18
SEG19
SEG20
SEG21
SEG22
SEG23
SEG24
DRIVE1
DRIVE2
DRIVE3
DRIVE4
Z8M
3.3K
Z11D
15K
Z11E
15K
Z11F
15K
U41
U20
U30
UDN2985A
Z9
Z10
Z4
Z5
Z6
Z7
TP38
TP37
TP36
TP30
TP43
TP42
TP41
TP40
J6-32
J6-31
J6-14
J6-13
-WE
-DISPLAY1
-RESET
10MHZ/8
-DISPLAY2

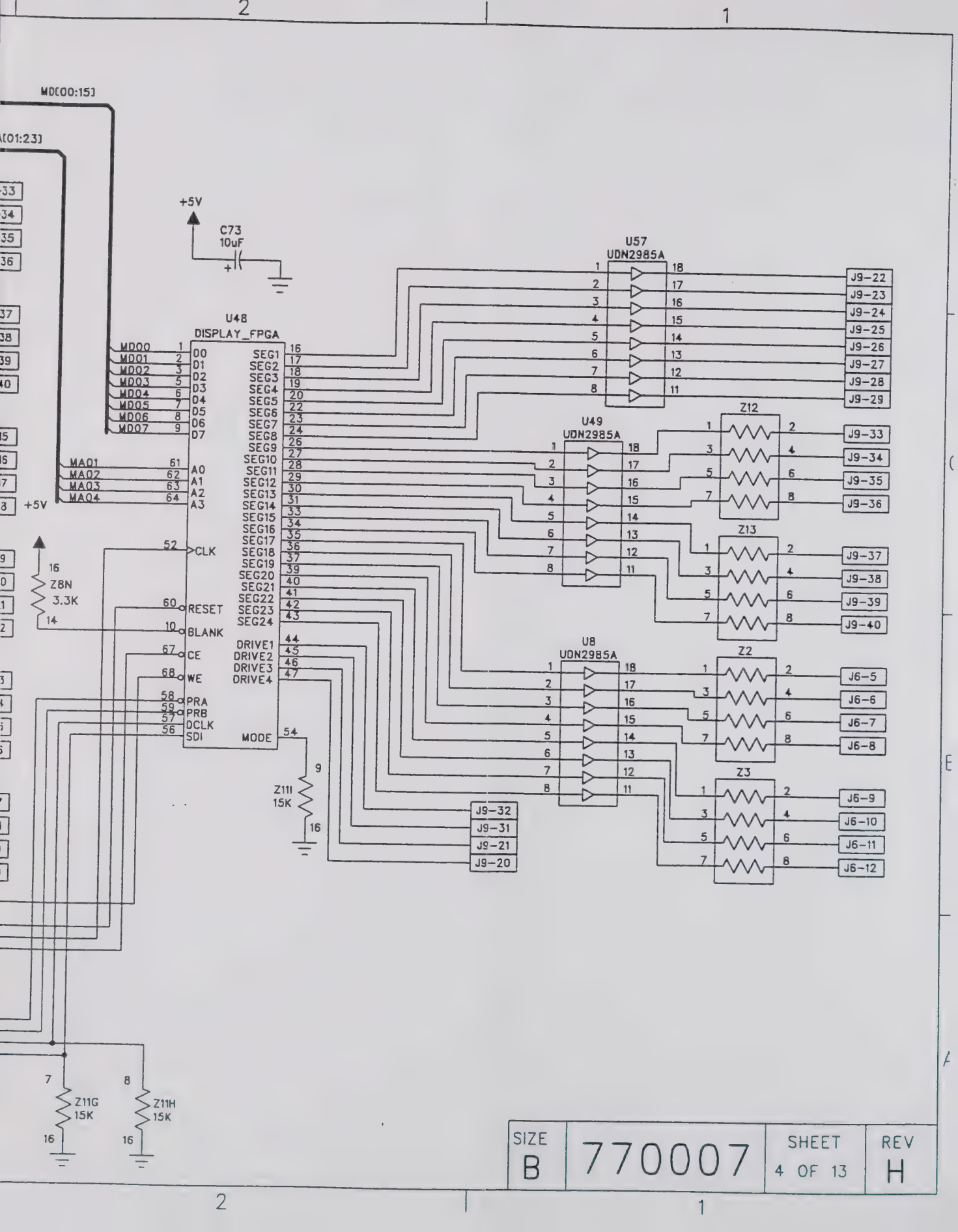

SIZE		SHEET	REV
B	770007	4 OF 13	H

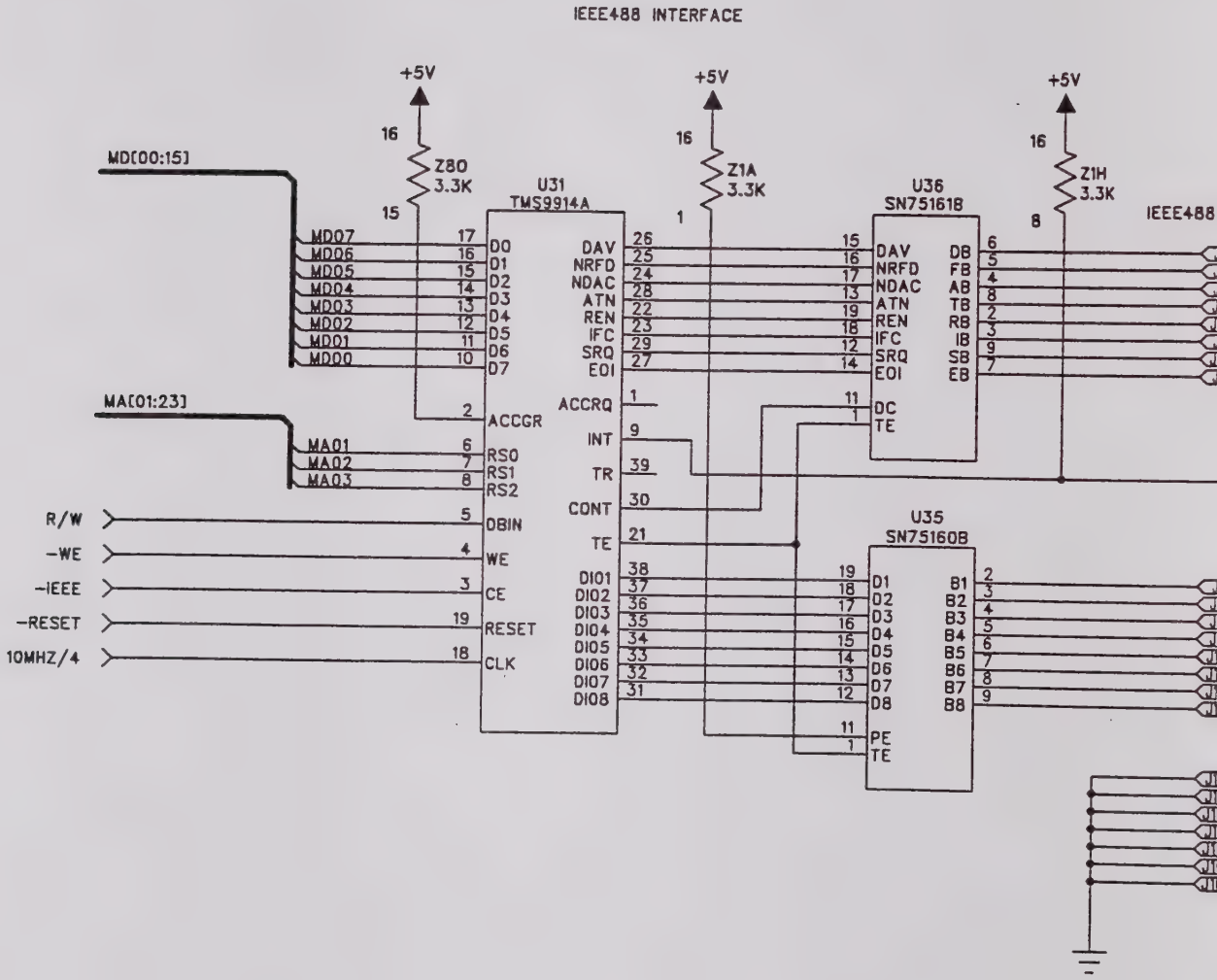
IEEE488 INTERFACE
+5V
+5V
+5V
16
16
16
Z80
3.3K
Z1A
3.3K
Z1H
3.3K
15
1
8
MD[00:15]
MA[01:23]
U31
TMS9914A
U36
SN751618
U35
SN75160B
IEEE488
MD07
MD06
MD05
MD04
MD03
MD02
MD01
MD00
D0
D1
D2
D3
D4
D5
D6
D7
ACCGR
MA01
MA02
MA03
RS0
RS1
RS2
R/W
-WE
-IEEE
-RESET
10MHZ/4
OBIN
WE
CE
RESET
CLK
DAV
NRFD
NDAC
ATN
REN
IFC
SRQ
EOI
ACCRQ
INT
TR
CONT
TE
DIO1
DIO2
DIO3
DIO4
DIO5
DIO6
DIO7
DIO8
DC
TE
PE
DB
FB
AB
TB
RB
IB
SB
EB
B1
B2
B3
B4
B5
B6
B7
B8

CONNECTOR

0-6
0-7
0-8
0-11
0-17
0-9
0-10
0-5

-IEEEIRQ

0-1
0-2
0-3
0-4
-13
-14
-15
-16

-18
-19
-20
-21
-22
-23
-24

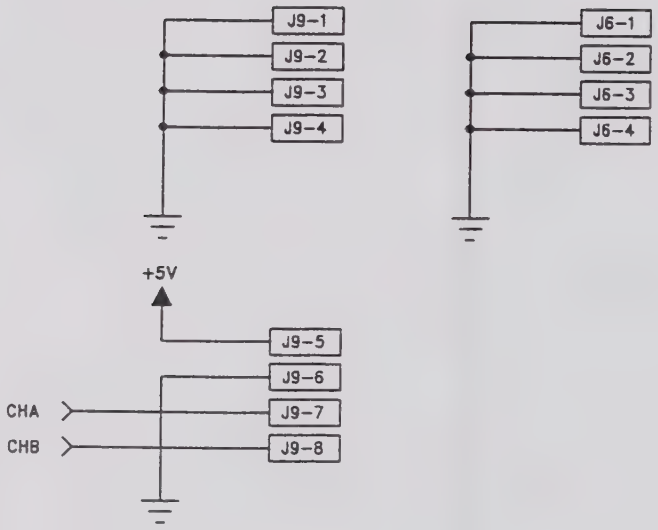

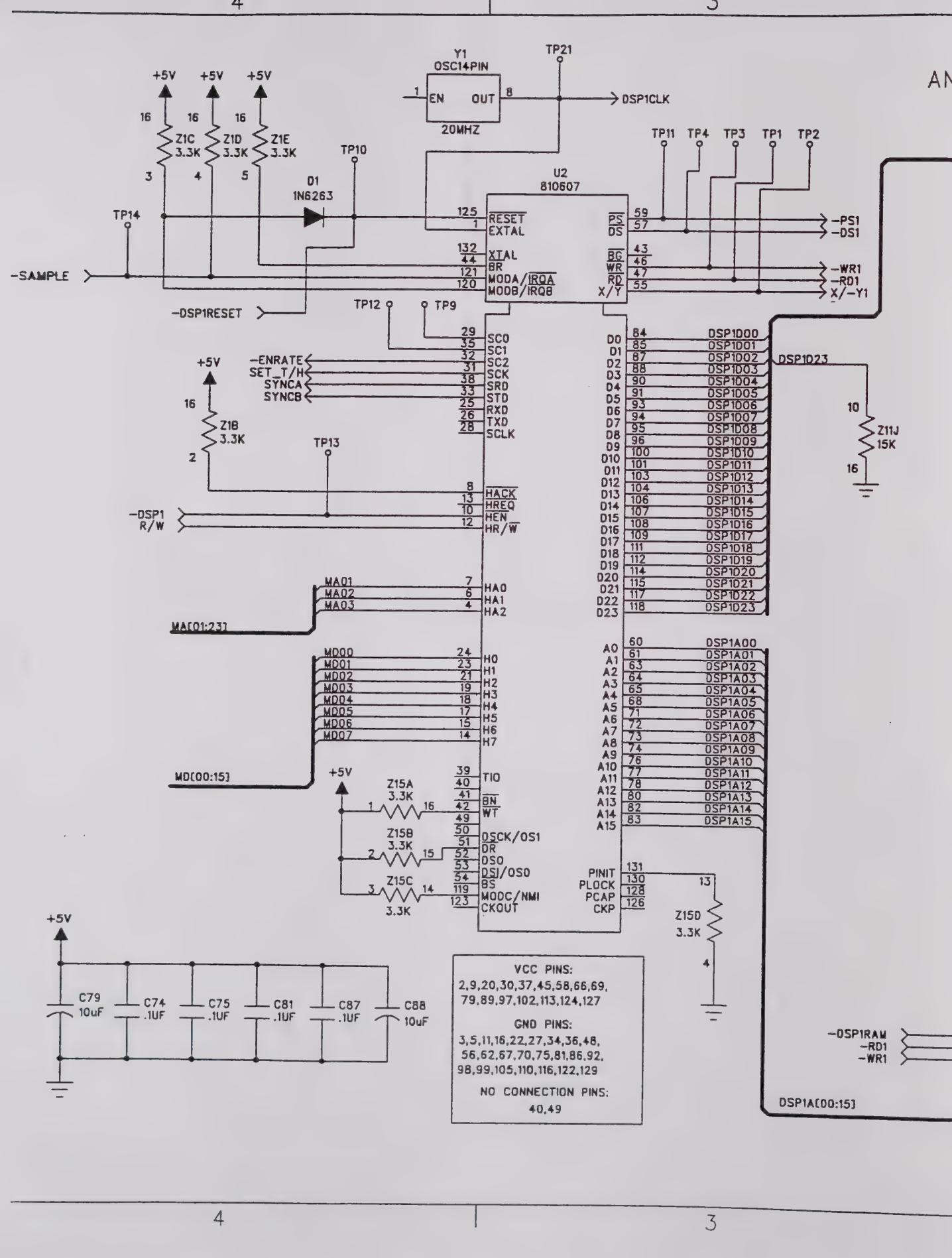
Y1
OSC14PIN
20MHZ
TP21
DSP1CLK
+5V
Z1C 3.3K
Z1D 3.3K
Z1E 3.3K
TP10
D1
1N6263
TP14
-SAMPLE
-DSP1RESET
U2
810607
RESET
EXTAL
XTAL
BR
MODA/IRQA
MODB/IRQB
PS
DS
BG
WR
RD
X/Y
TP11
TP4
TP3
TP1
TP2
-PS1
-DS1
-WR1
-RD1
X/-Y1
TP12
TP9
SC0
SC1
SC2
SCK
SRD
STD
RXD
TXD
SCLK
-ENRATE
SET_T/H
SYNCA
SYNCB
Z1B 3.3K
TP13
HACK
HREQ
HEN
HR/W
-DSP1 R/W
MA01
MA02
MA03
MA[01:23]
HA0
HA1
HA2
MD00
MD01
MD02
MD03
MD04
MD05
MD06
MD07
MD[00:15]
H0
H1
H2
H3
H4
H5
H6
H7
Z15A 3.3K
Z15B 3.3K
Z15C 3.3K
TIO
BN
WT
DSCK/OS1
DR
OS0
DSI/OS0
BS
MODC/NMI
CKOUT
D0
D1
D2
D3
D4
D5
D6
D7
D8
D9
D10
D11
D12
D13
D14
D15
D16
D17
D18
D19
D20
D21
D22
D23
DSP1D00
DSP1D01
DSP1D02
DSP1D03
DSP1D04
DSP1D05
DSP1D06
DSP1D07
DSP1D08
DSP1D09
DSP1D10
DSP1D11
DSP1D12
DSP1D13
DSP1D14
DSP1D15
DSP1D16
DSP1D17
DSP1D18
DSP1D19
DSP1D20
DSP1D21
DSP1D22
DSP1D23
DSP1D23
Z11J 15K
A0
A1
A2
A3
A4
A5
A6
A7
A8
A9
A10
A11
A12
A13
A14
A15
DSP1A00
DSP1A01
DSP1A02
DSP1A03
DSP1A04
DSP1A05
DSP1A06
DSP1A07
DSP1A08
DSP1A09
DSP1A10
DSP1A11
DSP1A12
DSP1A13
DSP1A14
DSP1A15
PINIT
PLOCK
PCAP
CKP
Z15D 3.3K
-DSP1RAM
-RD1
-WR1
DSP1A[00:15]
C79 10uF
C74 .1UF
C75 .1UF
C81 .1UF
C87 .1UF
C88 10uF
VCC PINS:
2,9,20,30,37,45,58,66,69,
79,89,97,102,113,124,127
GND PINS:
3,5,11,16,22,27,34,36,48,
56,62,67,70,75,81,86,92,
98,99,105,110,116,122,129
NO CONNECTION PINS:
40,49

LE DSP

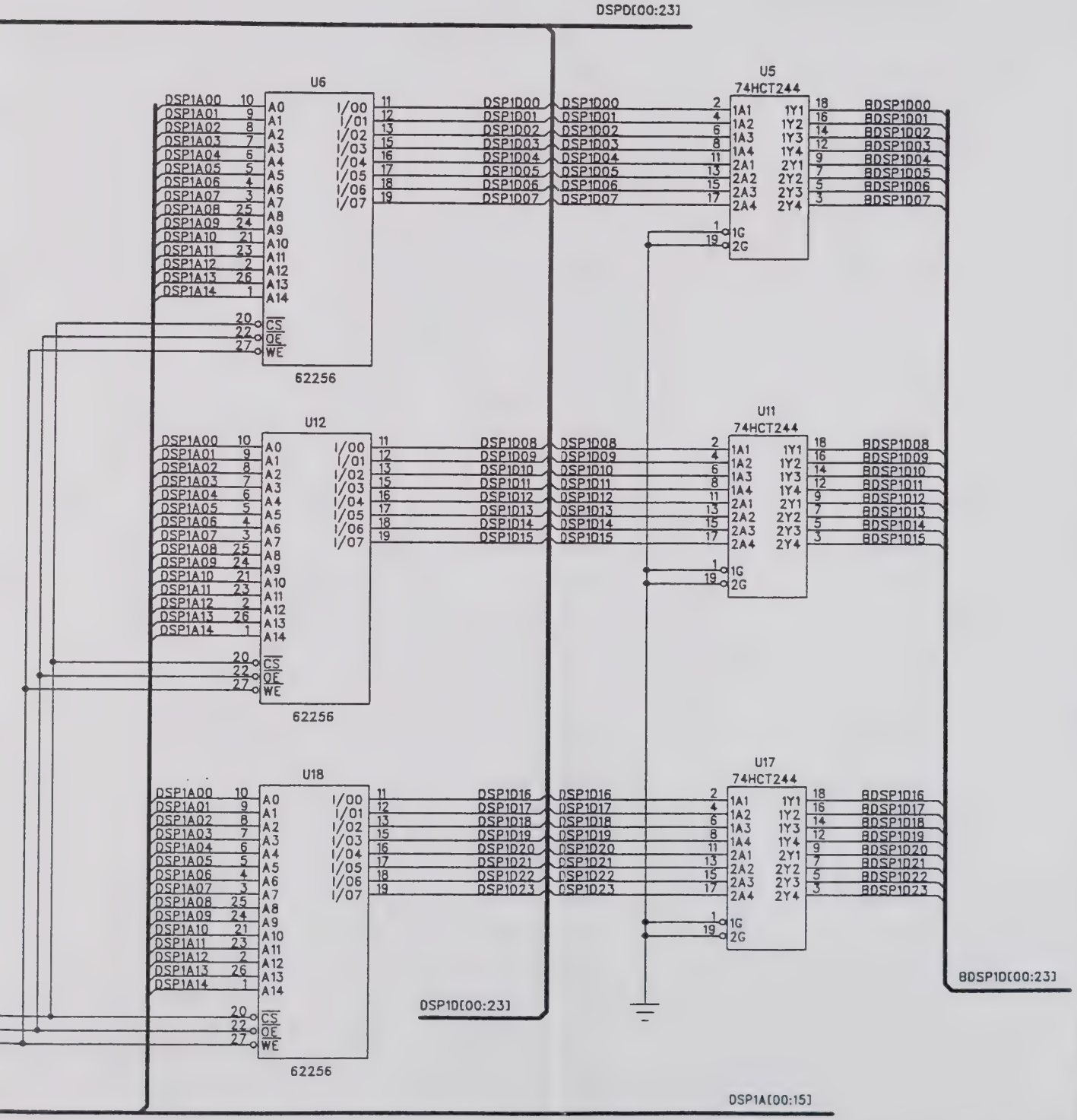

SIZE		SHEET	REV
B	770007	6 OF 13	H

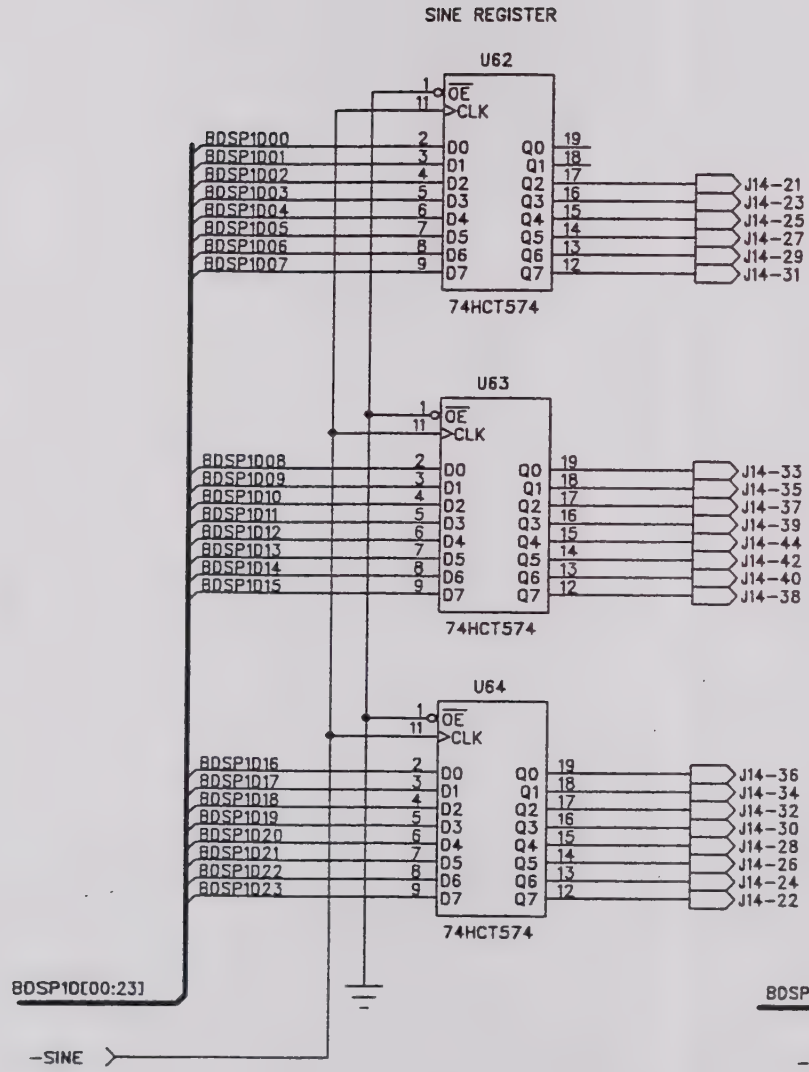
SINE REGISTER
U62
U63
U64
74HCT574
BDSP1D00
BDSP1D01
BDSP1D02
BDSP1D03
BDSP1D04
BDSP1D05
BDSP1D06
BDSP1D07
BDSP1D08
BDSP1D09
BDSP1D10
BDSP1D11
BDSP1D12
BDSP1D13
BDSP1D14
BDSP1D15
BDSP1D16
BDSP1D17
BDSP1D18
BDSP1D19
BDSP1D20
BDSP1D21
BDSP1D22
BDSP1D23
J14-21
J14-23
J14-25
J14-27
J14-29
J14-31
J14-33
J14-35
J14-37
J14-39
J14-44
J14-42
J14-40
J14-38
J14-36
J14-34
J14-32
J14-30
J14-28
J14-26
J14-24
J14-22
BDSP1D[00:23]
-SINE

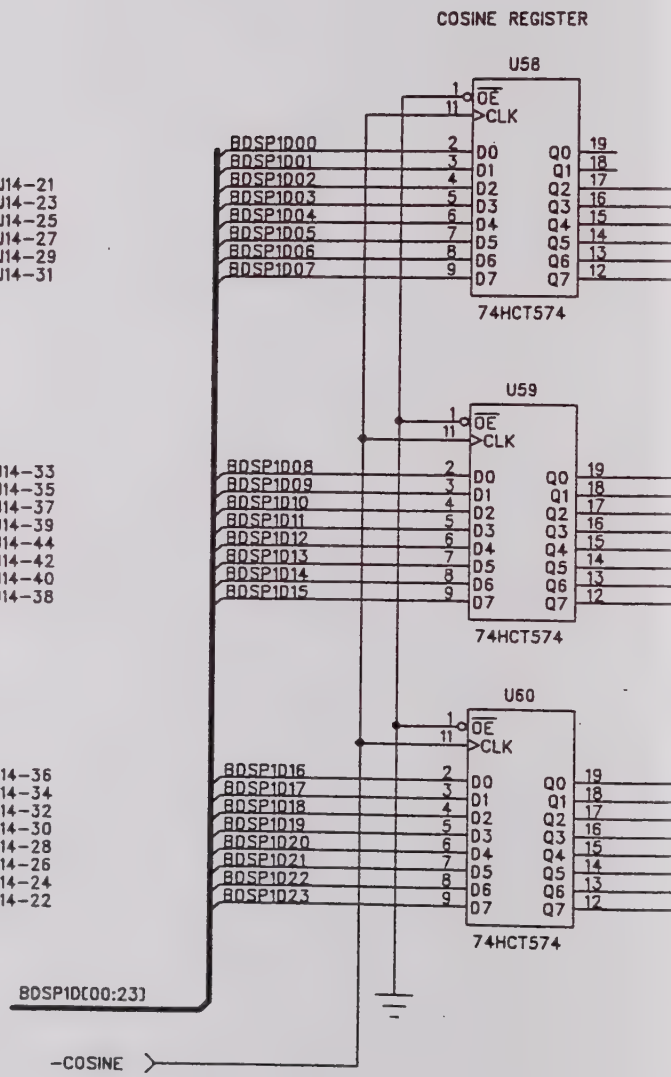
COSINE REGISTER
U58
U59
U60
74HCT574
BDSP1D00
BDSP1D01
BDSP1D02
BDSP1D03
BDSP1D04
BDSP1D05
BDSP1D06
BDSP1D07
BDSP1D08
BDSP1D09
BDSP1D10
BDSP1D11
BDSP1D12
BDSP1D13
BDSP1D14
BDSP1D15
BDSP1D16
BDSP1D17
BDSP1D18
BDSP1D19
BDSP1D20
BDSP1D21
BDSP1D22
BDSP1D23
BDSP1D[00:23]
-COSINE

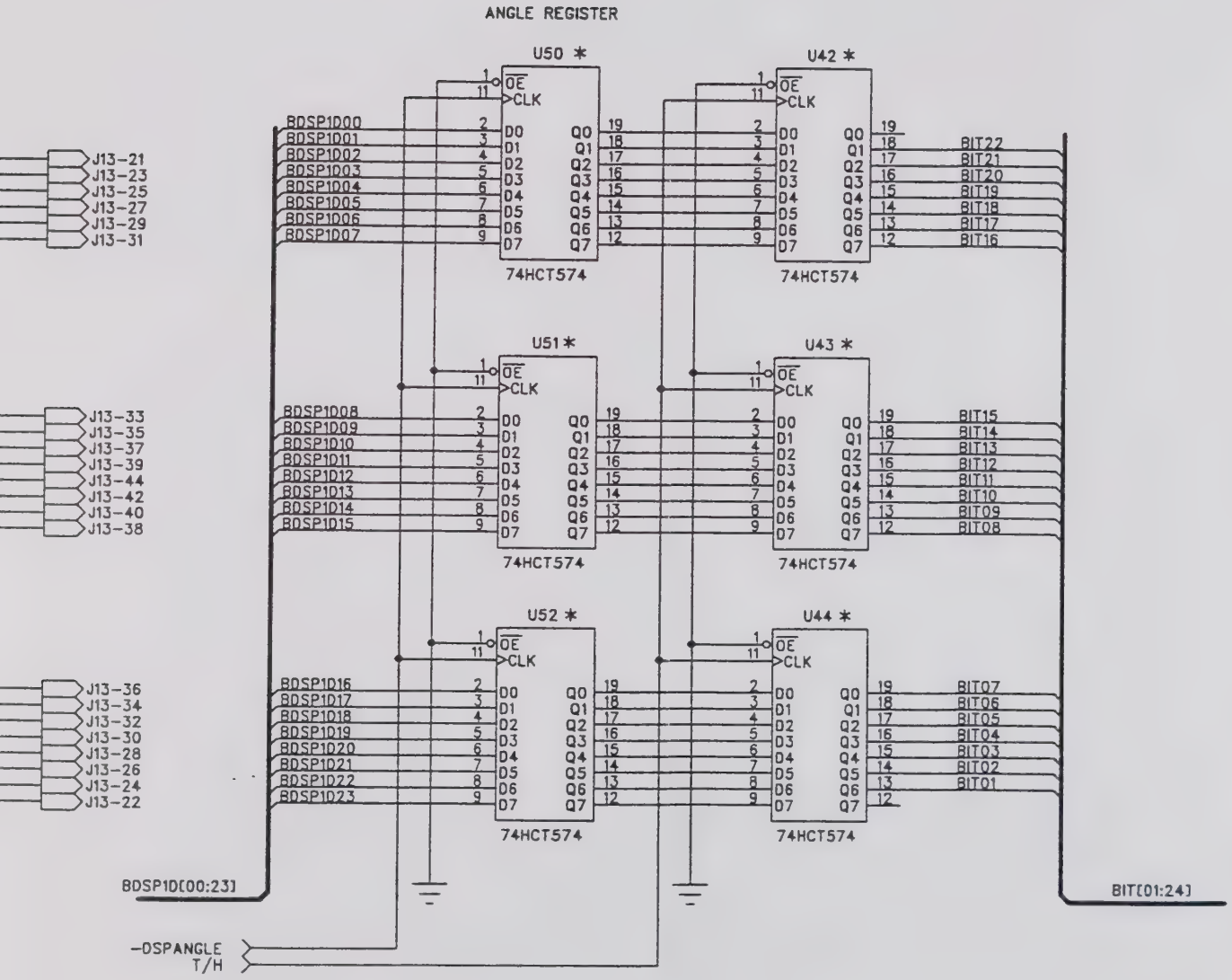

* NOTE: U42 – U44 AND U50 – U52 ARE OPTIONAL.

SIZE		SHEET	REV
B	770007	7 OF 13	H

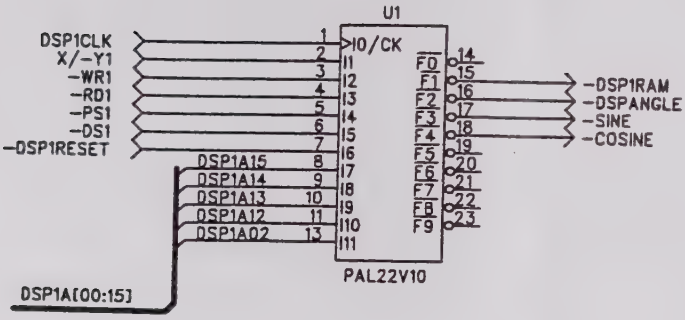

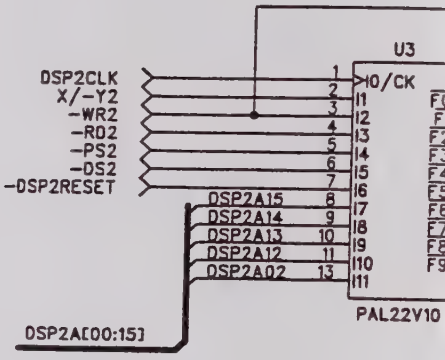

SINE/COSINE BOARD CONTROL

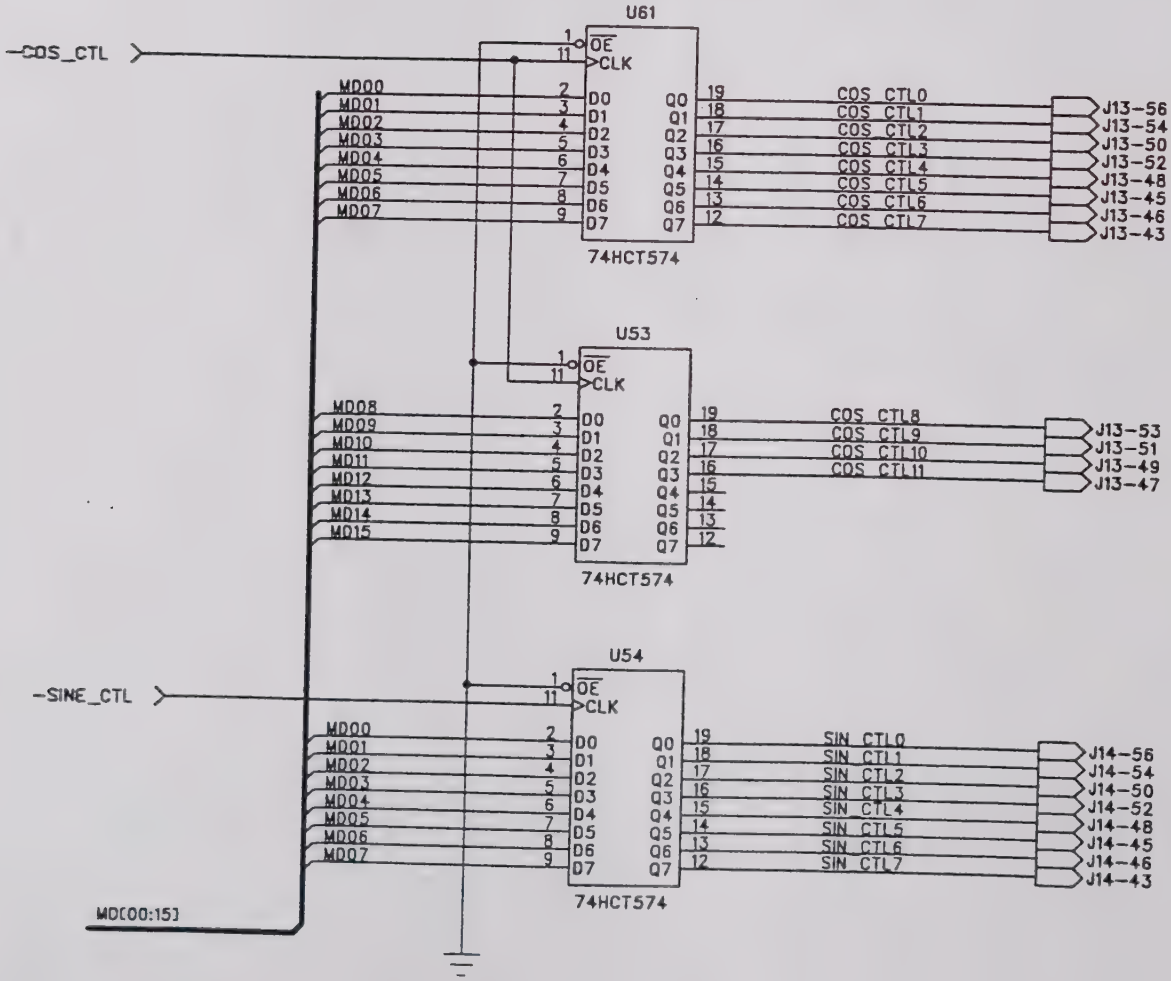

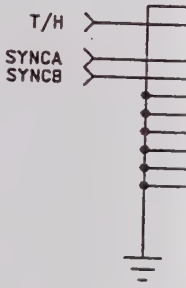

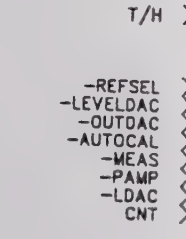

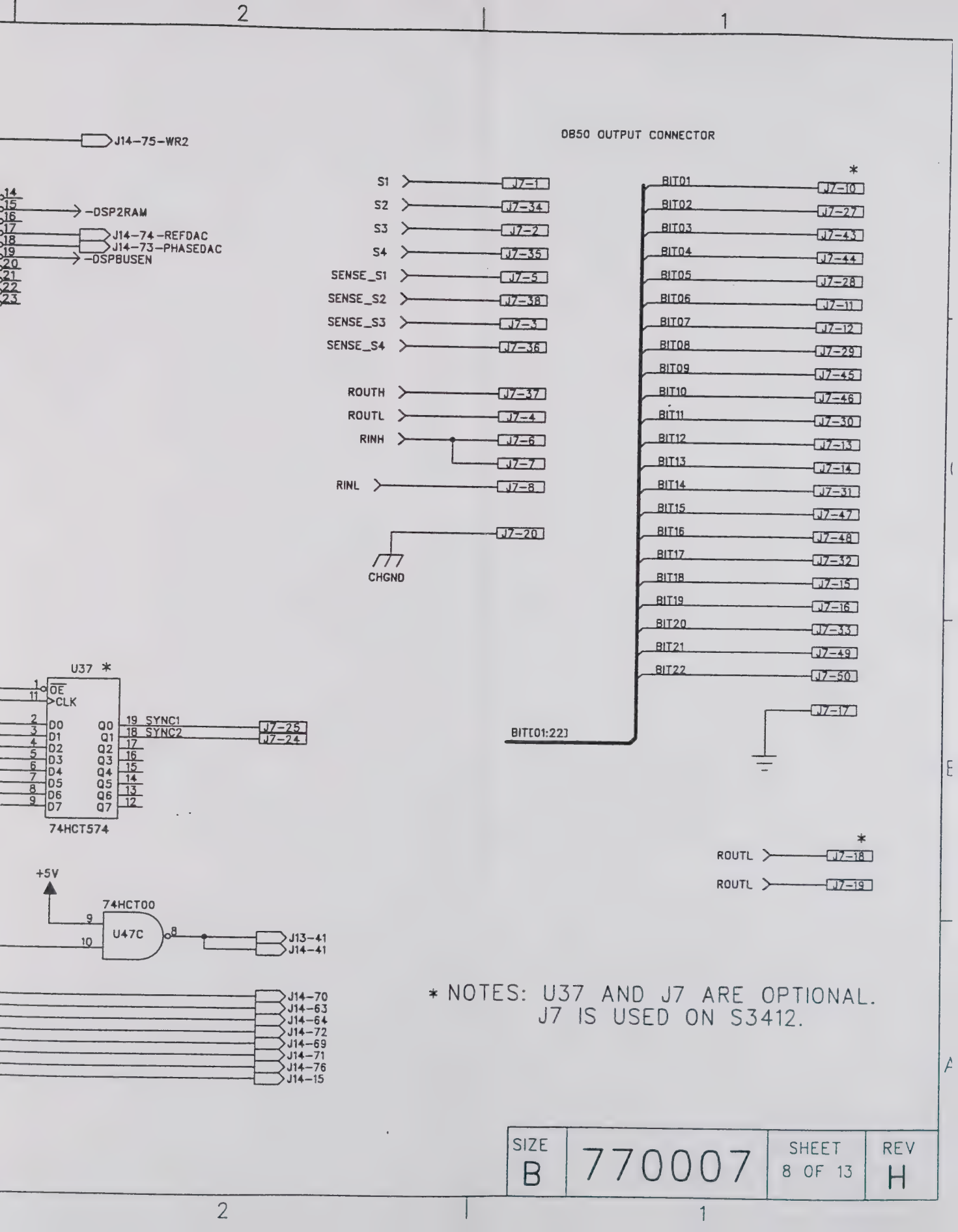

* NOTES: U37 AND J7 ARE OPTIONAL.
J7 IS USED ON S3412.

SIZE		SHEET	REV
B	770007	8 OF 13	H

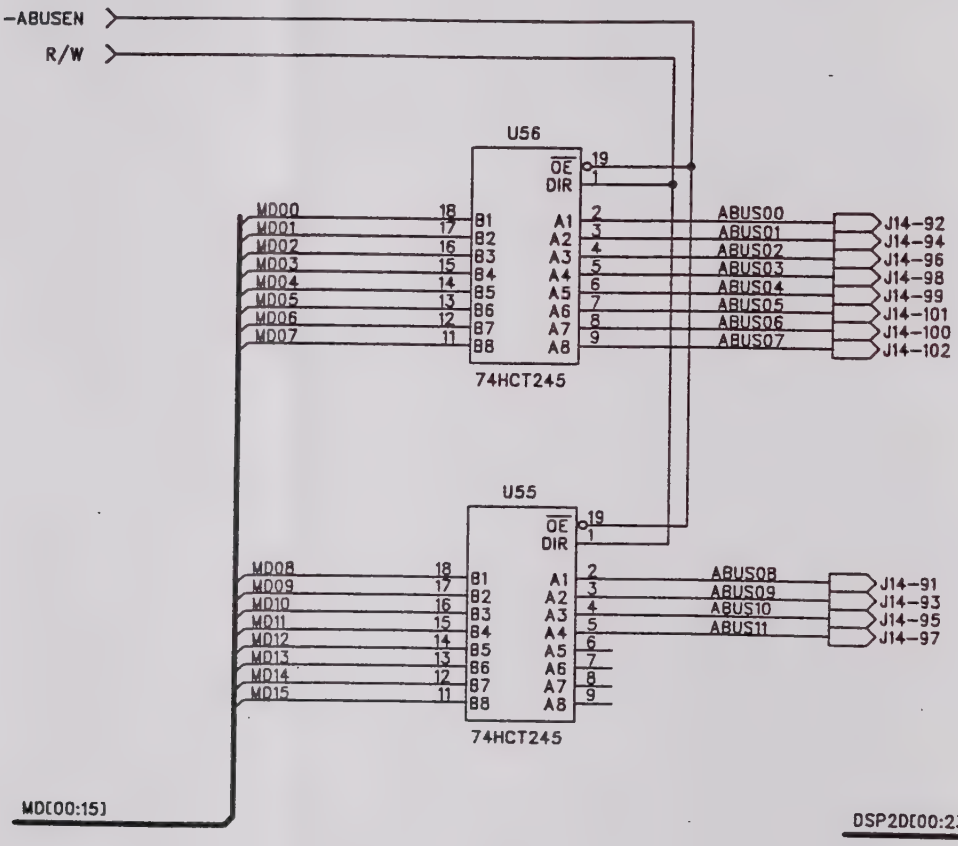
-ABUSEN
R/W
U56
OE
DIR
19
1
MD00
MD01
MD02
MD03
MD04
MD05
MD06
MD07
18
17
16
15
14
13
12
11
B1
B2
B3
B4
B5
B6
B7
B8
A1
A2
A3
A4
A5
A6
A7
A8
2
3
4
5
6
7
8
9
ABUS00
ABUS01
ABUS02
ABUS03
ABUS04
ABUS05
ABUS06
ABUS07
J14-92
J14-94
J14-96
J14-98
J14-99
J14-101
J14-100
J14-102
74HCT245
U55
OE
DIR
19
1
MD08
MD09
MD10
MD11
MD12
MD13
MD14
MD15
18
17
16
15
14
13
12
11
B1
B2
B3
B4
B5
B6
B7
B8
A1
A2
A3
A4
A5
A6
A7
A8
2
3
4
5
6
7
8
9
ABUS08
ABUS09
ABUS10
ABUS11
J14-91
J14-93
J14-95
J14-97
74HCT245
MD[00:15]
DSP2D[00:23]

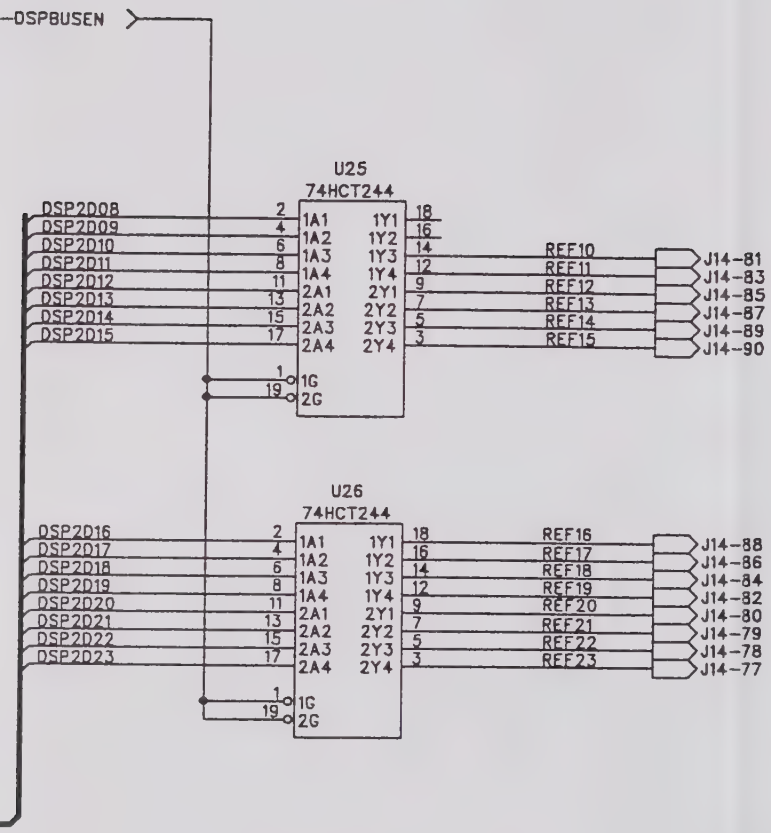

SIZE		SHEET	REV
B	770007	9 OF 13	H

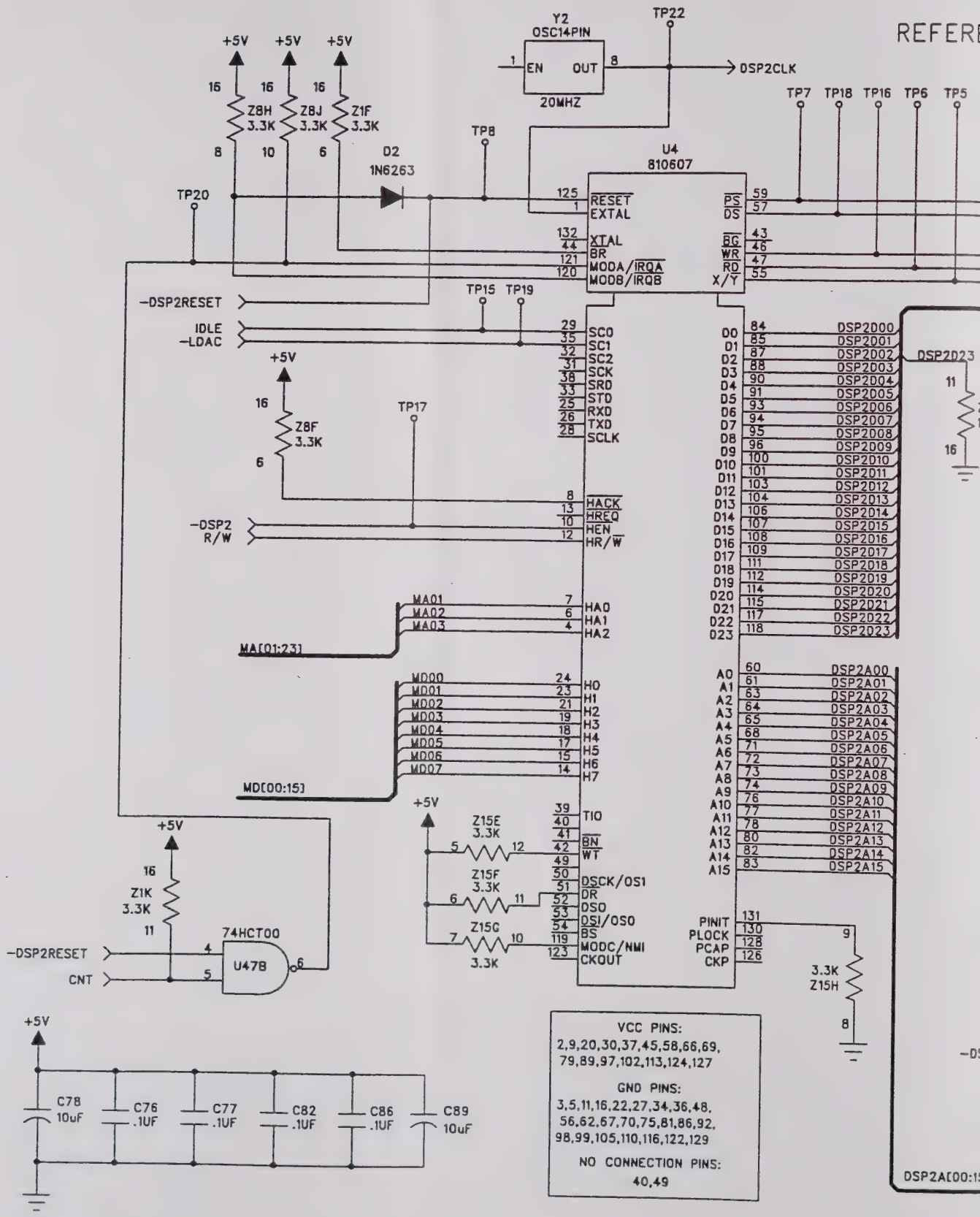
REFER
Y2
OSC14PIN
20MHZ
EN
OUT
TP22
DSP2CLK
TP7 TP18 TP16 TP6 TP5
+5V +5V +5V
Z8H 3.3K
Z8J 3.3K
Z1F 3.3K
D2
1N6263
TP8
TP20
U4
810607
RESET
EXTAL
XTAL
BR
MODA/IRQA
MODB/IRQB
PS
DS
BG
WR
RD
X/Y
-DSP2RESET
TP15 TP19
IDLE
-LDAC
SC0
SC1
SC2
SCK
SRD
STD
RXD
TXD
SCLK
Z8F 3.3K
TP17
HACK
HREQ
HEN
HR/W
-DSP2 R/W
MA01
MA02
MA03
MA[01:23]
HA0
HA1
HA2
MD00
MD01
MD02
MD03
MD04
MD05
MD06
MD07
MD[00:15]
H0
H1
H2
H3
H4
H5
H6
H7
TIO
BN
WT
DSCK/OS1
DR
DSO
DSI/OSO
BS
MODC/NMI
CKOUT
Z15E 3.3K
Z15F 3.3K
Z15G 3.3K
Z1K 3.3K
74HCT00
U47B
CNT
PINIT
PLOCK
PCAP
CKP
Z15H 3.3K
D0 D1 D2 D3 D4 D5 D6 D7 D8 D9 D10 D11 D12 D13 D14 D15 D16 D17 D18 D19 D20 D21 D22 D23
DSP2D00 DSP2D01 DSP2D02 DSP2D03 DSP2D04 DSP2D05 DSP2D06 DSP2D07 DSP2D08 DSP2D09 DSP2D10 DSP2D11 DSP2D12 DSP2D13 DSP2D14 DSP2D15 DSP2D16 DSP2D17 DSP2D18 DSP2D19 DSP2D20 DSP2D21 DSP2D22 DSP2D23
DSP2D23
A0 A1 A2 A3 A4 A5 A6 A7 A8 A9 A10 A11 A12 A13 A14 A15
DSP2A00 DSP2A01 DSP2A02 DSP2A03 DSP2A04 DSP2A05 DSP2A06 DSP2A07 DSP2A08 DSP2A09 DSP2A10 DSP2A11 DSP2A12 DSP2A13 DSP2A14 DSP2A15
DSP2A[00:1
C78 10uF
C76 .1UF
C77 .1UF
C82 .1UF
C86 .1UF
C89 10uF
VCC PINS:
2,9,20,30,37,45,58,66,69,
79,89,97,102,113,124,127
GND PINS:
3,5,11,16,22,27,34,36,48,
56,62,67,70,75,81,86,92,
98,99,105,110,116,122,129
NO CONNECTION PINS:
40,49

NCE DSP

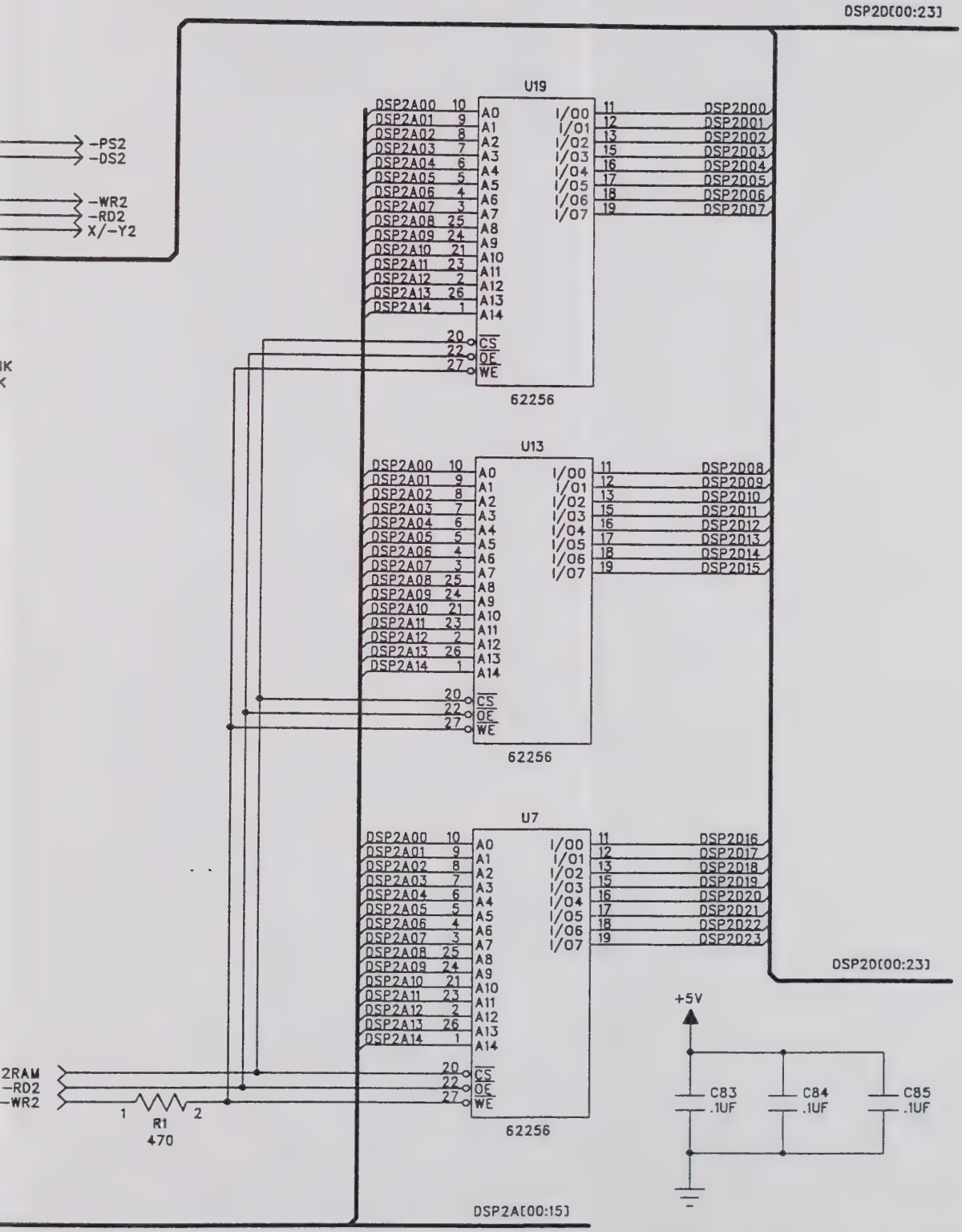

SIZE		SHEET	REV
B	770007	10 OF 13	H

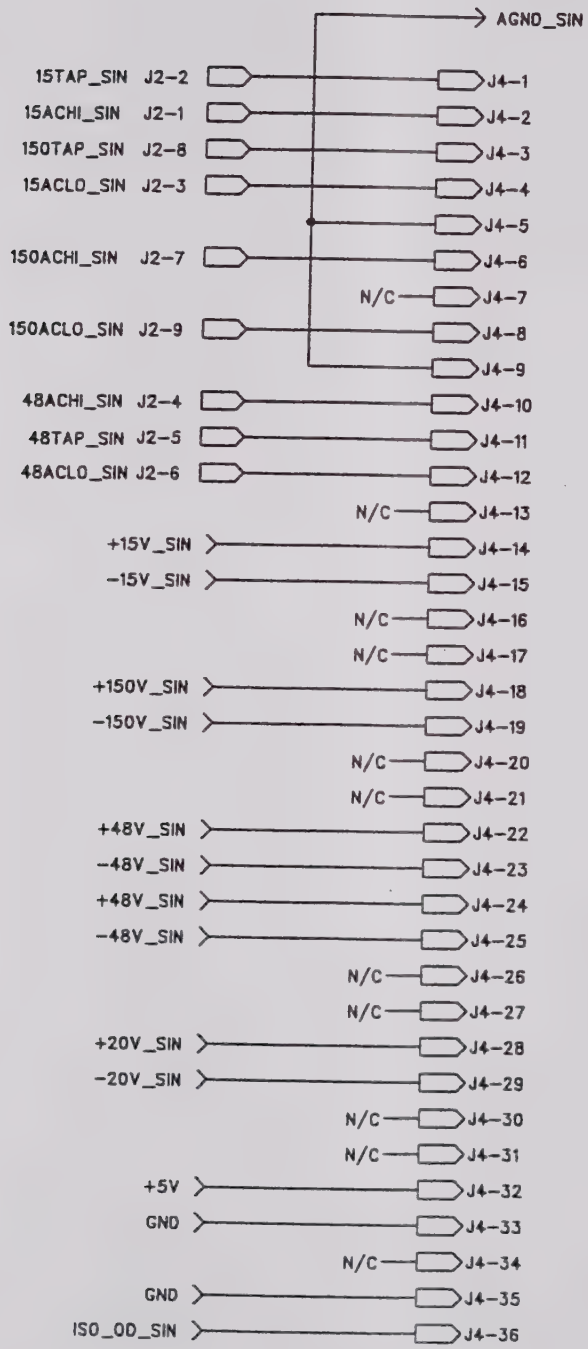
AGND_SIN
15TAP_SIN J2-2
15ACHI_SIN J2-1
150TAP_SIN J2-8
15ACLO_SIN J2-3
150ACHI_SIN J2-7
150ACLO_SIN J2-9
48ACHI_SIN J2-4
48TAP_SIN J2-5
48ACLO_SIN J2-6
+15V_SIN
-15V_SIN
+150V_SIN
-150V_SIN
+48V_SIN
-48V_SIN
+48V_SIN
-48V_SIN
+20V_SIN
-20V_SIN
+5V
GND
GND
ISO_OD_SIN
N/C
J4-1
J4-2
J4-3
J4-4
J4-5
J4-6
J4-7
J4-8
J4-9
J4-10
J4-11
J4-12
J4-13
J4-14
J4-15
J4-16
J4-17
J4-18
J4-19
J4-20
J4-21
J4-22
J4-23
J4-24
J4-25
J4-26
J4-27
J4-28
J4-29
J4-30
J4-31
J4-32
J4-33
J4-34
J4-35
J4-36

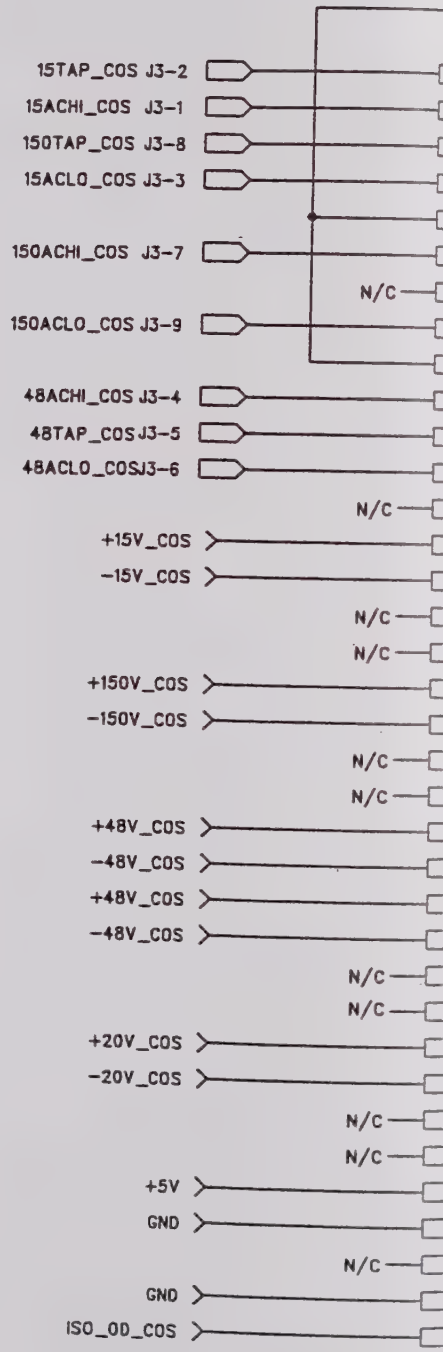
15TAP_COS J3-2
15ACHI_COS J3-1
150TAP_COS J3-8
15ACLO_COS J3-3
150ACHI_COS J3-7
150ACLO_COS J3-9
48ACHI_COS J3-4
48TAP_COS J3-5
48ACLO_COS J3-6
+15V_COS
-15V_COS
+150V_COS
-150V_COS
+48V_COS
-48V_COS
+48V_COS
-48V_COS
+20V_COS
-20V_COS
+5V
GND
GND
ISO_OD_COS
N/C

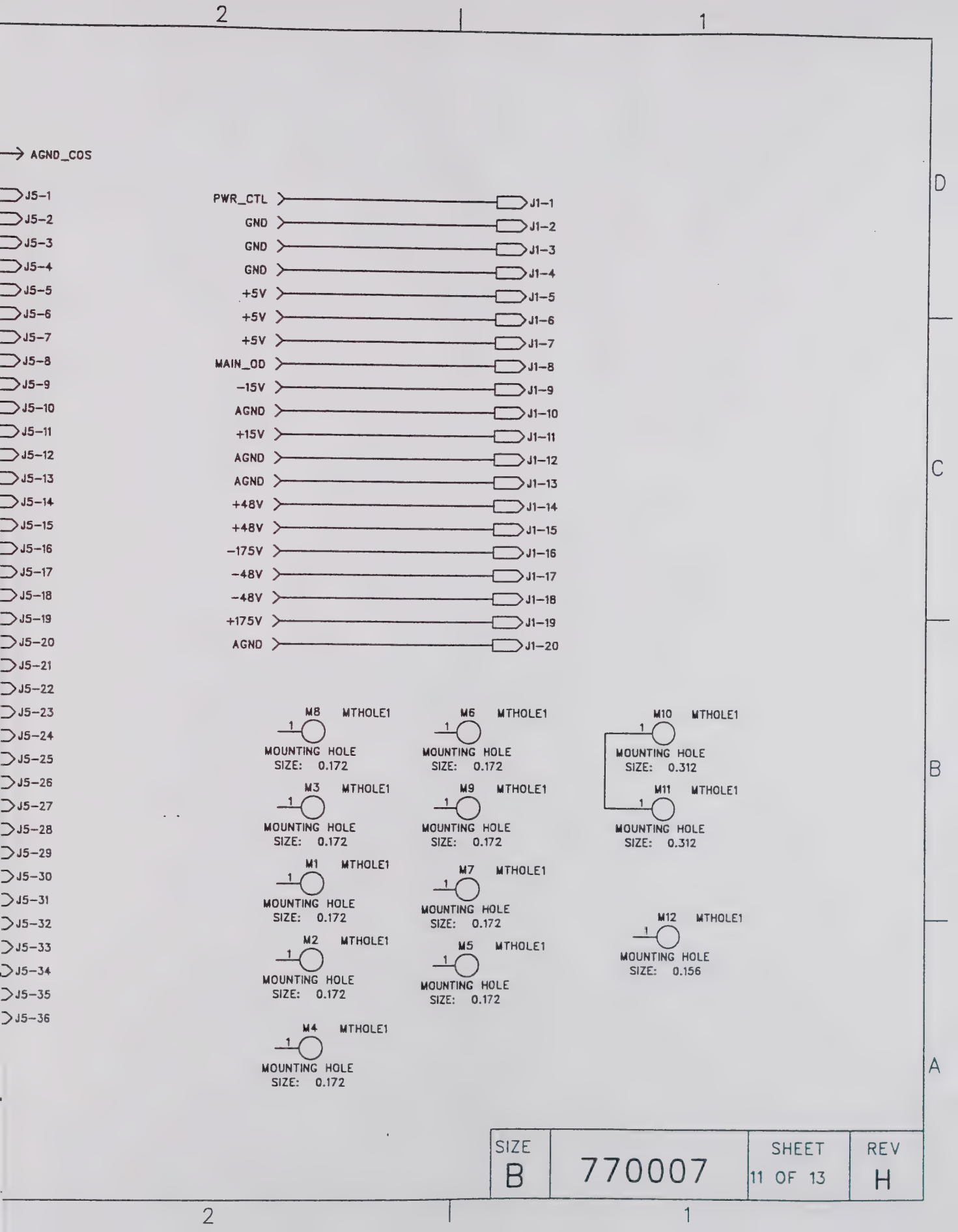
2
1
AGND_COS
J5-1
J5-2
J5-3
J5-4
J5-5
J5-6
J5-7
J5-8
J5-9
J5-10
J5-11
J5-12
J5-13
J5-14
J5-15
J5-16
J5-17
J5-18
J5-19
J5-20
J5-21
J5-22
J5-23
J5-24
J5-25
J5-26
J5-27
J5-28
J5-29
J5-30
J5-31
J5-32
J5-33
J5-34
J5-35
J5-36
PWR_CTL J1-1
GND J1-2
GND J1-3
GND J1-4
+5V J1-5
+5V J1-6
+5V J1-7
MAIN_OD J1-8
-15V J1-9
AGND J1-10
+15V J1-11
AGND J1-12
AGND J1-13
+48V J1-14
+48V J1-15
-175V J1-16
-48V J1-17
-48V J1-18
+175V J1-19
AGND J1-20
M8 MTHOLE1
1
MOUNTING HOLE
SIZE: 0.172
M3 MTHOLE1
1
MOUNTING HOLE
SIZE: 0.172
M1 MTHOLE1
1
MOUNTING HOLE
SIZE: 0.172
M2 MTHOLE1
1
MOUNTING HOLE
SIZE: 0.172
M4 MTHOLE1
1
MOUNTING HOLE
SIZE: 0.172
M6 MTHOLE1
1
MOUNTING HOLE
SIZE: 0.172
M9 MTHOLE1
1
MOUNTING HOLE
SIZE: 0.172
M7 MTHOLE1
1
MOUNTING HOLE
SIZE: 0.172
M5 MTHOLE1
1
MOUNTING HOLE
SIZE: 0.172
M10 MTHOLE1
1
MOUNTING HOLE
SIZE: 0.312
M11 MTHOLE1
1
MOUNTING HOLE
SIZE: 0.312
M12 MTHOLE1
1
MOUNTING HOLE
SIZE: 0.156
D
C
B
A
SIZE
B
770007
SHEET
11 OF 13
REV
H
2
1

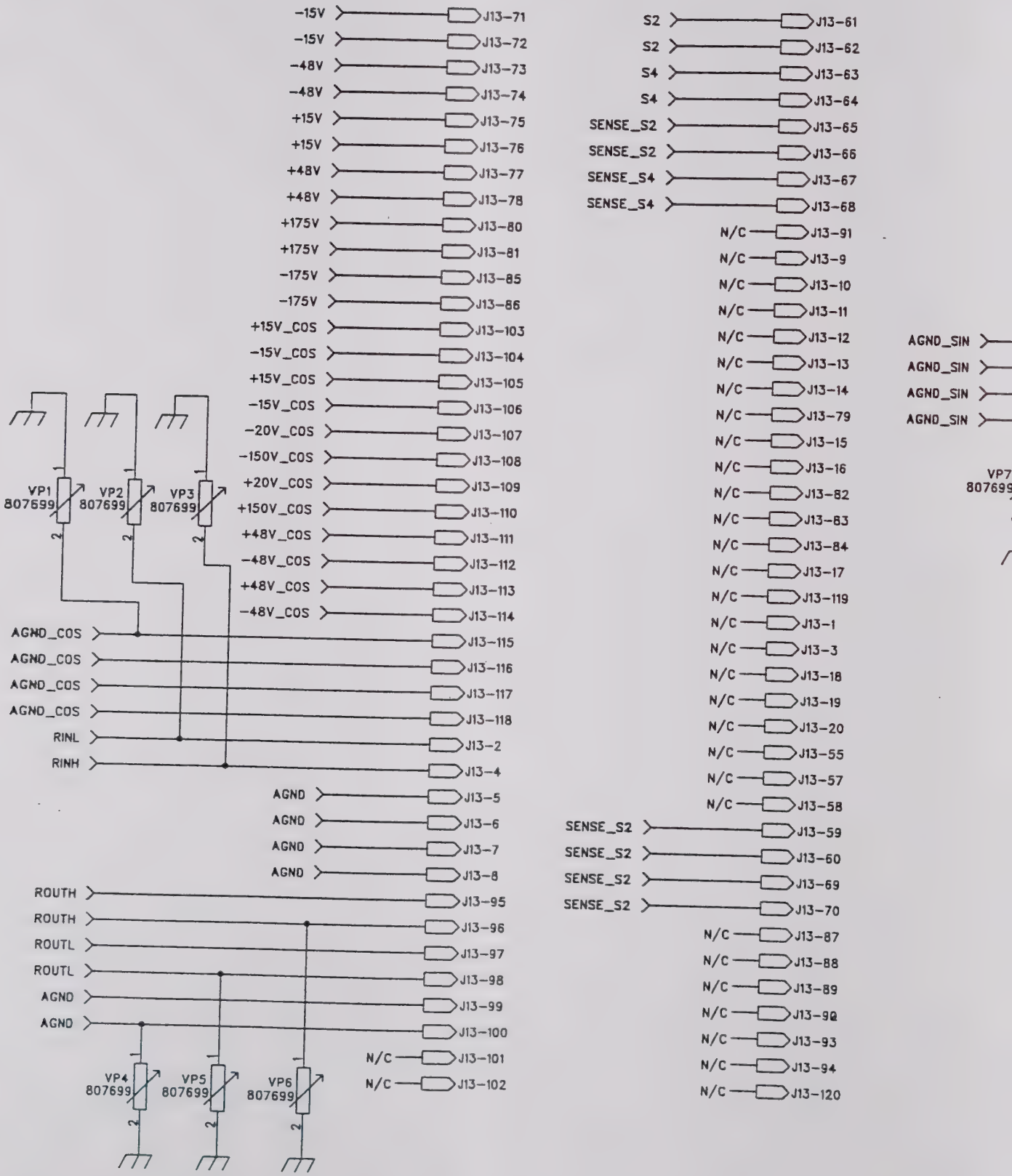
-15V J13-71
-15V J13-72
-48V J13-73
-48V J13-74
+15V J13-75
+15V J13-76
+48V J13-77
+48V J13-78
+175V J13-80
+175V J13-81
-175V J13-85
-175V J13-86
+15V_COS J13-103
-15V_COS J13-104
+15V_COS J13-105
-15V_COS J13-106
-20V_COS J13-107
-150V_COS J13-108
+20V_COS J13-109
+150V_COS J13-110
+48V_COS J13-111
-48V_COS J13-112
+48V_COS J13-113
-48V_COS J13-114
VP1 807699
VP2 807699
VP3 807699
AGND_COS J13-115
AGND_COS J13-116
AGND_COS J13-117
AGND_COS J13-118
RINL J13-2
RINH J13-4
AGND J13-5
AGND J13-6
AGND J13-7
AGND J13-8
ROUTH J13-95
ROUTH J13-96
ROUTL J13-97
ROUTL J13-98
AGND J13-99
AGND J13-100
N/C J13-101
N/C J13-102
VP4 807699
VP5 807699
VP6 807699
S2 J13-61
S2 J13-62
S4 J13-63
S4 J13-64
SENSE_S2 J13-65
SENSE_S2 J13-66
SENSE_S4 J13-67
SENSE_S4 J13-68
N/C J13-91
N/C J13-9
N/C J13-10
N/C J13-11
N/C J13-12
N/C J13-13
N/C J13-14
N/C J13-79
N/C J13-15
N/C J13-16
N/C J13-82
N/C J13-83
N/C J13-84
N/C J13-17
N/C J13-119
N/C J13-1
N/C J13-3
N/C J13-18
N/C J13-19
N/C J13-20
N/C J13-55
N/C J13-57
N/C J13-58
SENSE_S2 J13-59
SENSE_S2 J13-60
SENSE_S2 J13-69
SENSE_S2 J13-70
N/C J13-87
N/C J13-88
N/C J13-89
N/C J13-90
N/C J13-93
N/C J13-94
N/C J13-120
AGND_SIN
AGND_SIN
AGND_SIN
AGND_SIN
VP7 807699

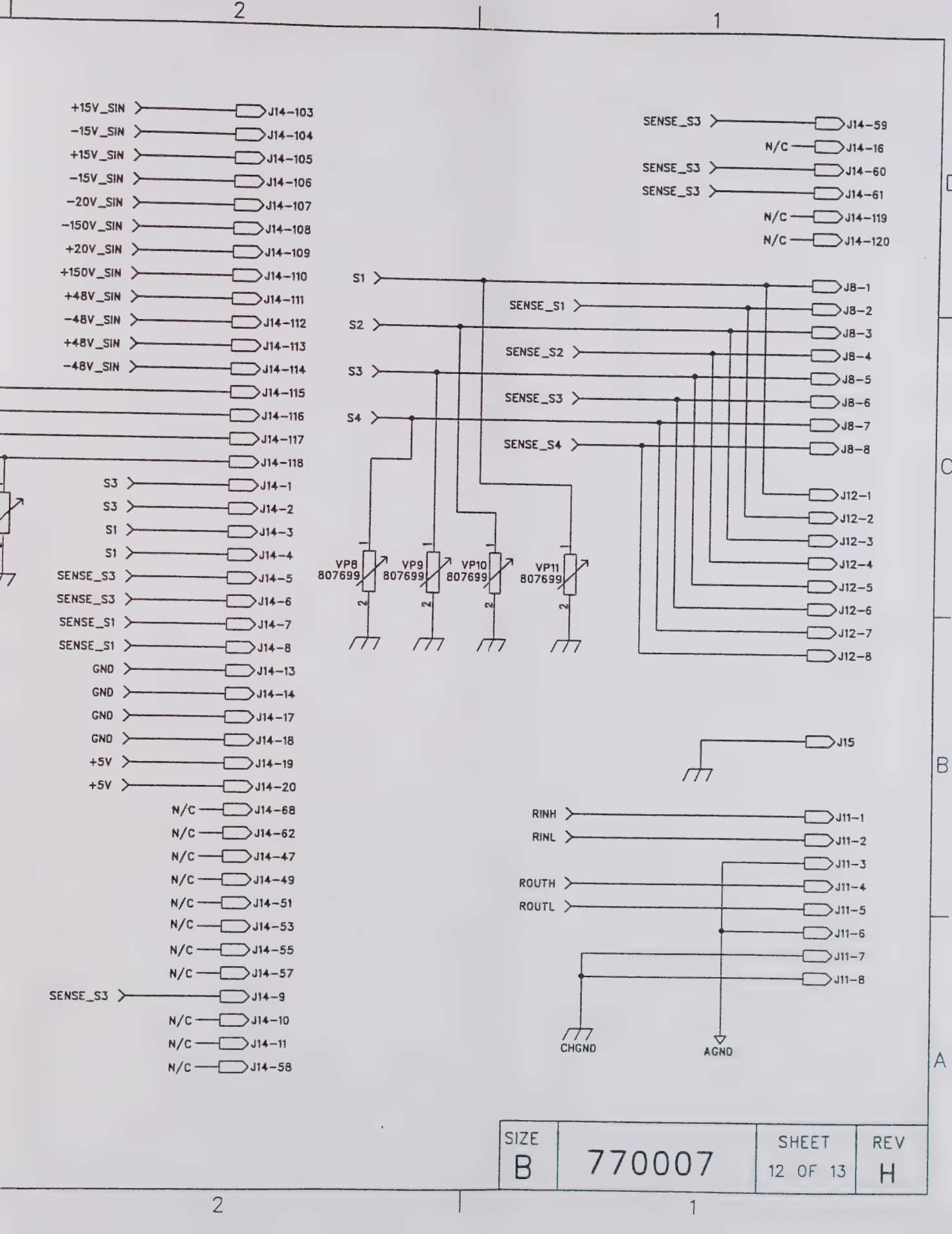

SIZE		SHEET	REV
B	770007	12 OF 13	H

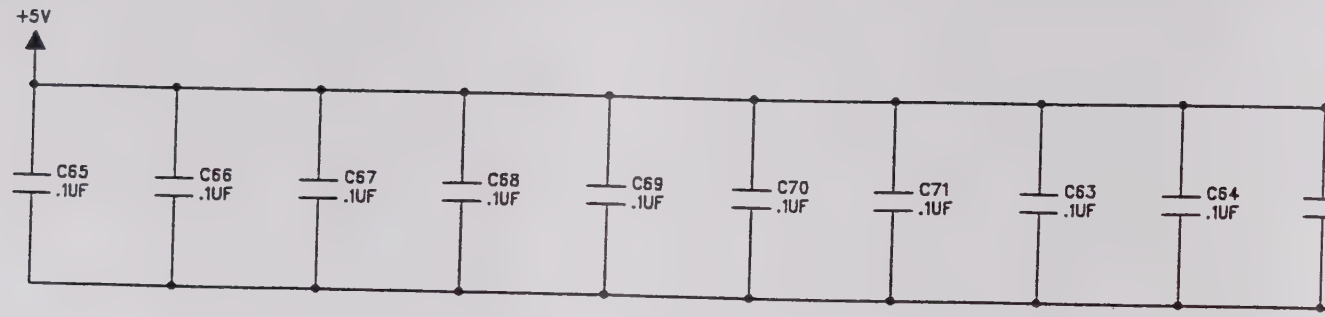
+5V
C65 .1UF
C66 .1UF
C67 .1UF
C68 .1UF
C69 .1UF
C70 .1UF
C71 .1UF
C63 .1UF
C64 .1UF

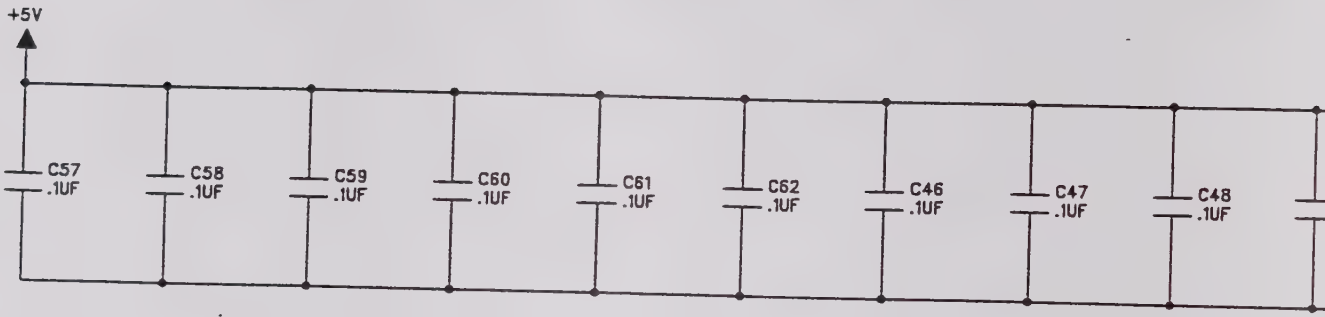
+5V
C57 .1UF
C58 .1UF
C59 .1UF
C60 .1UF
C61 .1UF
C62 .1UF
C46 .1UF
C47 .1UF
C48 .1UF

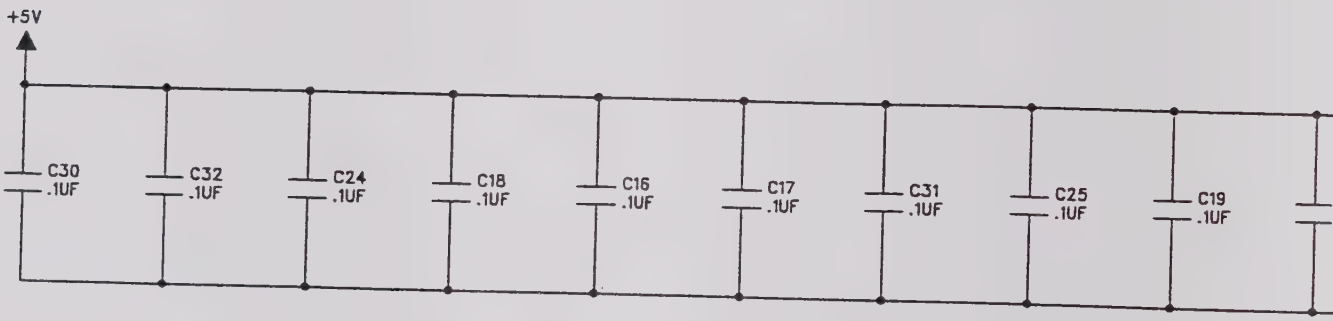
+5V
C30 .1UF
C32 .1UF
C24 .1UF
C18 .1UF
C16 .1UF
C17 .1UF
C31 .1UF
C25 .1UF
C19 .1UF

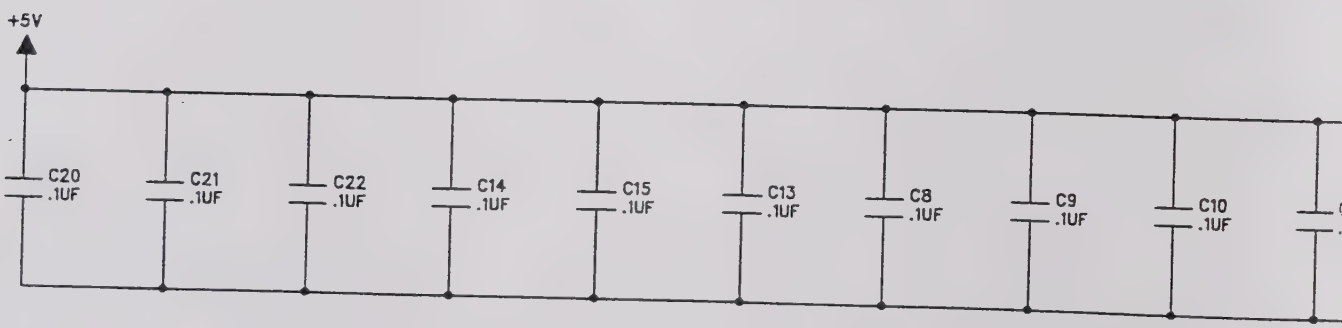
+5V
C20 .1UF
C21 .1UF
C22 .1UF
C14 .1UF
C15 .1UF
C13 .1UF
C8 .1UF
C9 .1UF
C10 .1UF

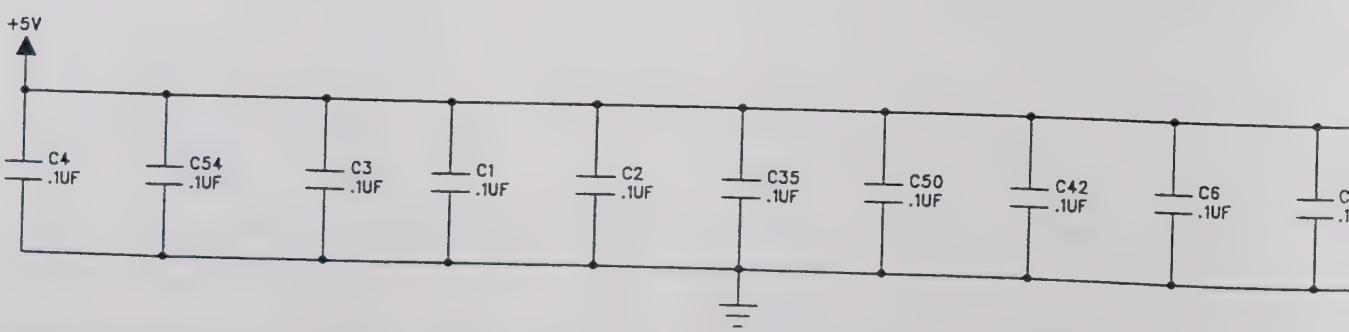
+5V
C4 .1UF
C54 .1UF
C3 .1UF
C1 .1UF
C2 .1UF
C35 .1UF
C50 .1UF
C42 .1UF
C6 .1UF

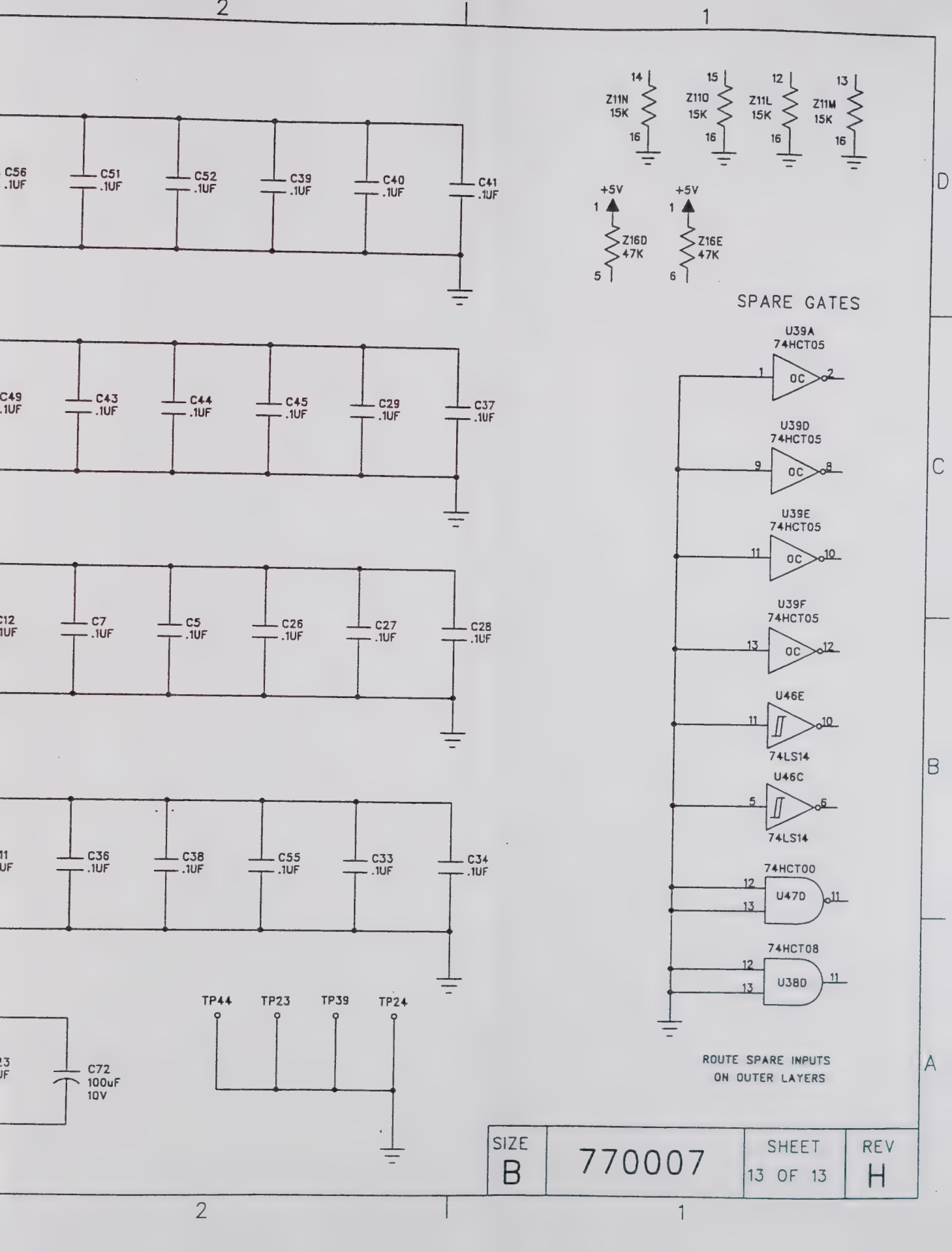
2
1
C56 .1UF
C51 .1UF
C52 .1UF
C39 .1UF
C40 .1UF
C41 .1UF
C49 .1UF
C43 .1UF
C44 .1UF
C45 .1UF
C29 .1UF
C37 .1UF
C12 1UF
C7 .1UF
C5 .1UF
C26 .1UF
C27 .1UF
C28 .1UF
11 UF
C36 .1UF
C38 .1UF
C55 .1UF
C33 .1UF
C34 .1UF
23 UF
C72 100uF 10V
TP44
TP23
TP39
TP24
14
Z11N 15K
16
15
Z11O 15K
16
12
Z11L 15K
16
13
Z11M 15K
16
+5V
1
Z16D 47K
5
+5V
1
Z16E 47K
6
SPARE GATES
U39A 74HCT05
1
OC
2
U39D 74HCT05
9
OC
8
U39E 74HCT05
11
OC
10
U39F 74HCT05
13
OC
12
U46E
11
10
74LS14
U46C
5
6
74LS14
74HCT00
12
13
U47D
11
74HCT08
12
13
U38D
11
ROUTE SPARE INPUTS ON OUTER LAYERS
D
C
B
A
SIZE B
770007
SHEET 13 OF 13
REV H
2
1

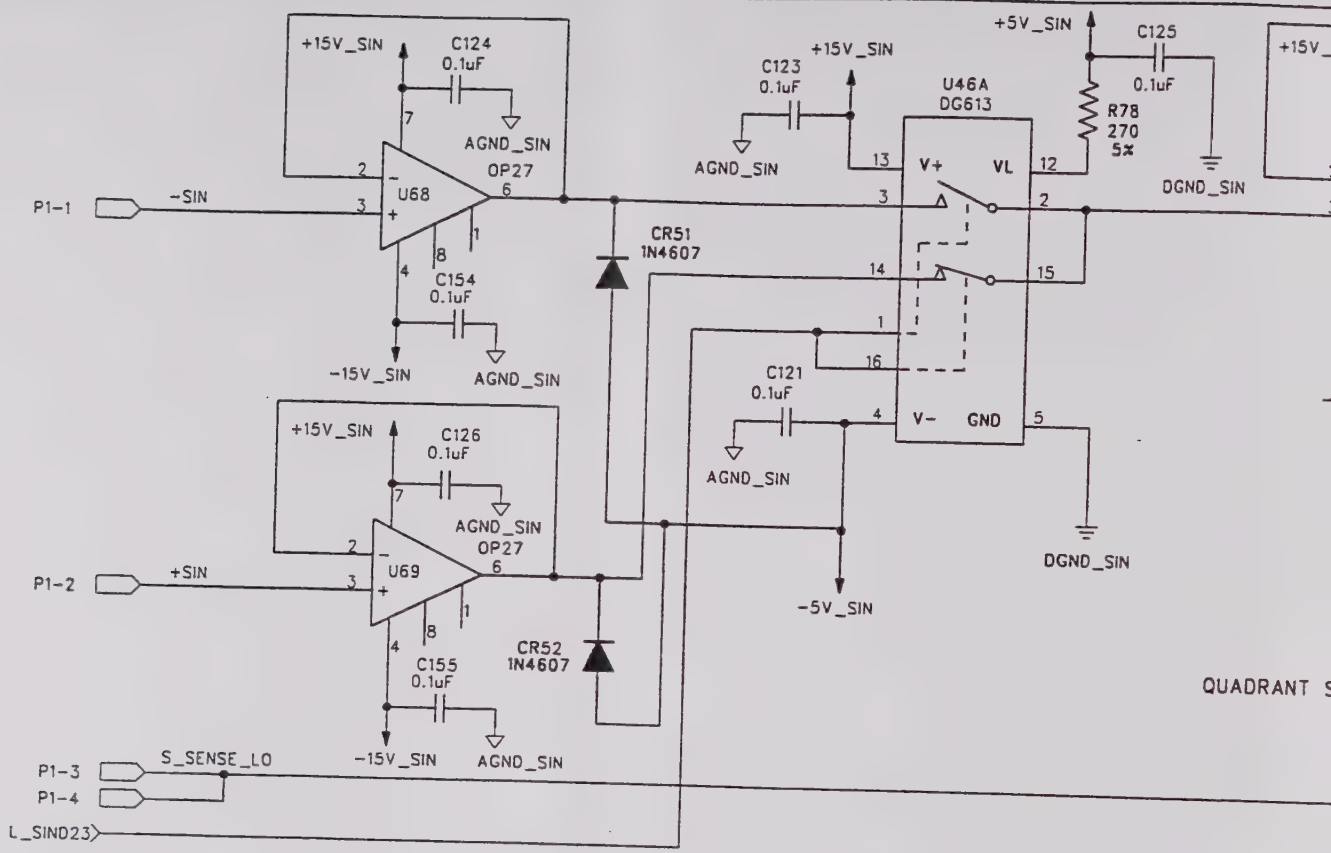
+15V_SIN
C124
0.1uF
AGND_SIN
U68
OP27
P1-1
-SIN
C154
0.1uF
-15V_SIN
AGND_SIN
C123
0.1uF
+15V_SIN
AGND_SIN
U46A
DG613
+5V_SIN
C125
0.1uF
R78
270
5%
DGND_SIN
CR51
1N4607
C121
0.1uF
AGND_SIN
V+
VL
V-
GND
DGND_SIN
-5V_SIN
+15V_SIN
C126
0.1uF
AGND_SIN
U69
OP27
P1-2
+SIN
C155
0.1uF
-15V_SIN
AGND_SIN
CR52
1N4607
P1-3
P1-4
S_SENSE_LO
L_SIND23
QUADRANT S

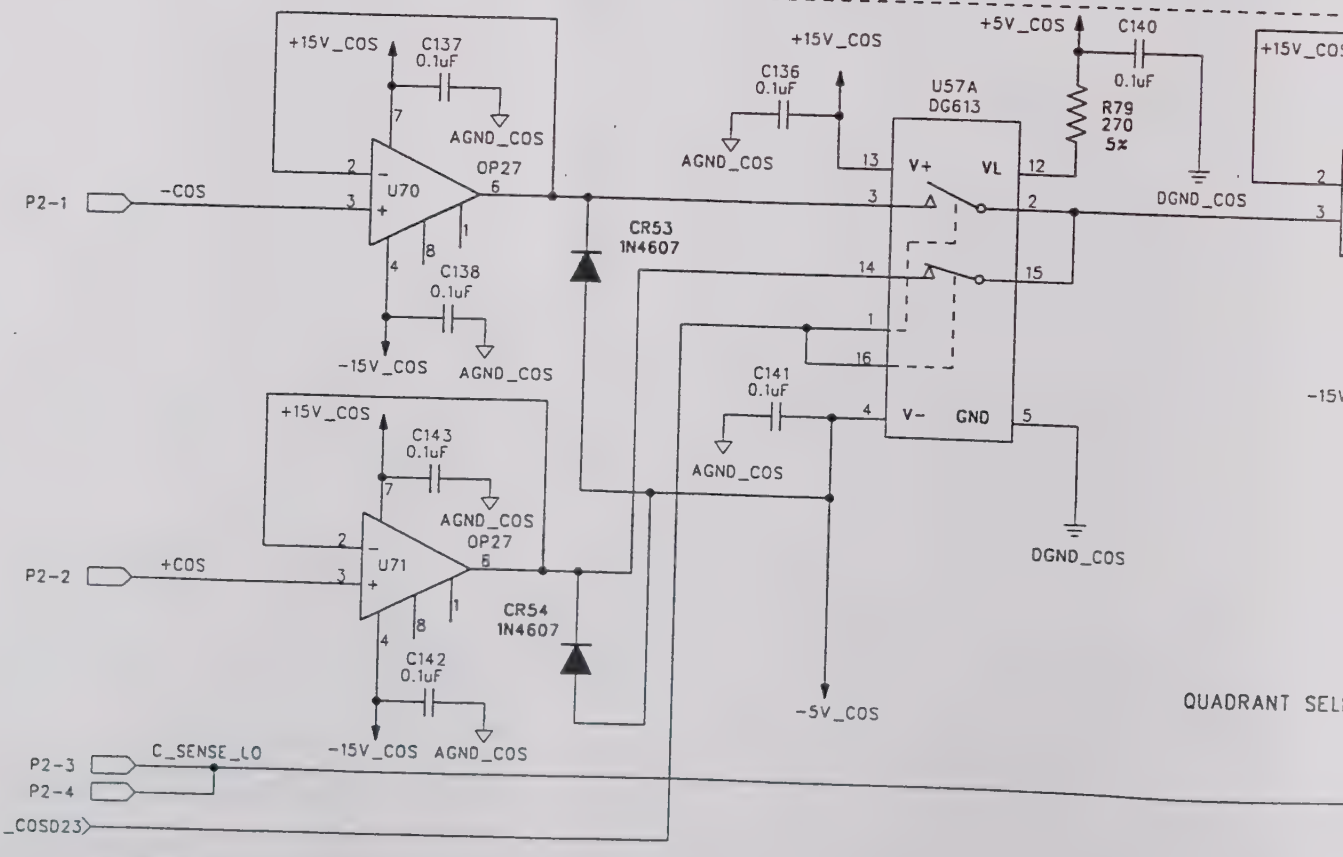
+15V_COS
C137
0.1uF
AGND_COS
U70
OP27
P2-1
-COS
C138
0.1uF
-15V_COS
AGND_COS
C136
0.1uF
+15V_COS
AGND_COS
U57A
DG613
+5V_COS
C140
0.1uF
R79
270
5%
DGND_COS
CR53
1N4607
C141
0.1uF
AGND_COS
V+
VL
V-
GND
DGND_COS
-5V_COS
+15V_COS
C143
0.1uF
AGND_COS
U71
OP27
P2-2
+COS
C142
0.1uF
-15V_COS
AGND_COS
CR54
1N4607
P2-3
P2-4
C_SENSE_LO
L_COSD23
QUADRANT SEL

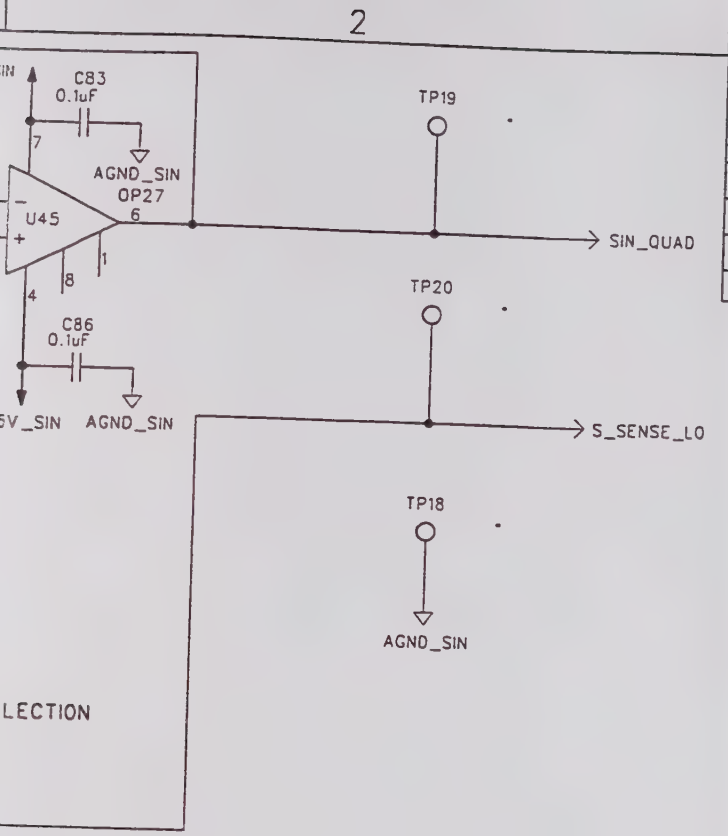

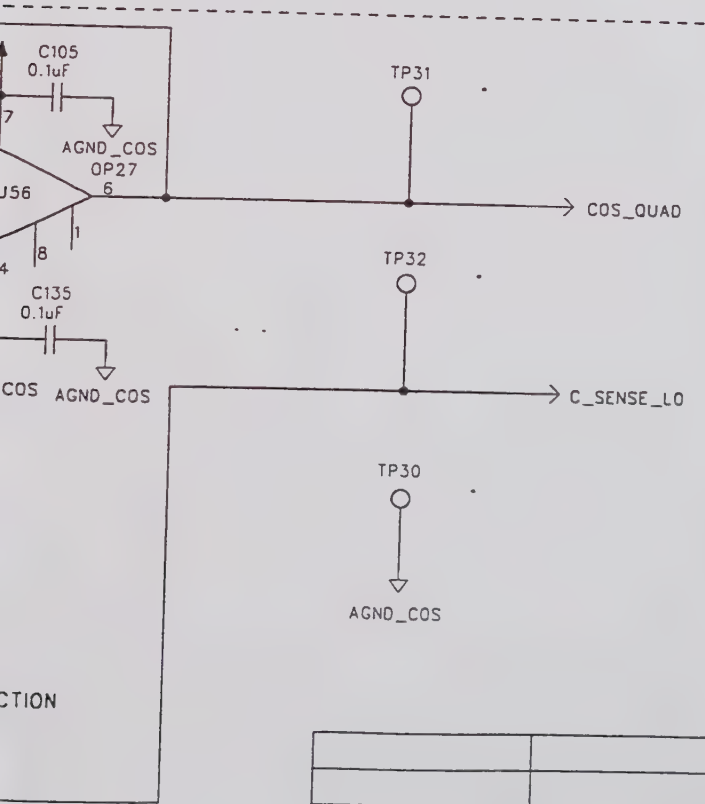

REVISIONS				
ZONE	LTR	DESCRIPTION	DATE	APPROVED
	B	ECN 33156, PINK BOOK UPDATES	8/1/94	
	C	REVISED PER ECR 33213	1/17/95	PVR
	D	REVISED PER ECR 33654	8/17/95	PVR
	E	REVISED PER ECR 34109	4/17/96	PVR
	F	REVISED PER ECR 35803	6/18/98	

NORTH ATLANTIC INSTRUMENTS INC.

SCHEMATIC
MODEL 5300 SIN/COS BOARD

784003	5300
NEXT ASSY	USED ON

SIZE		SHEET	REV
B	770001	1 OF 11	F

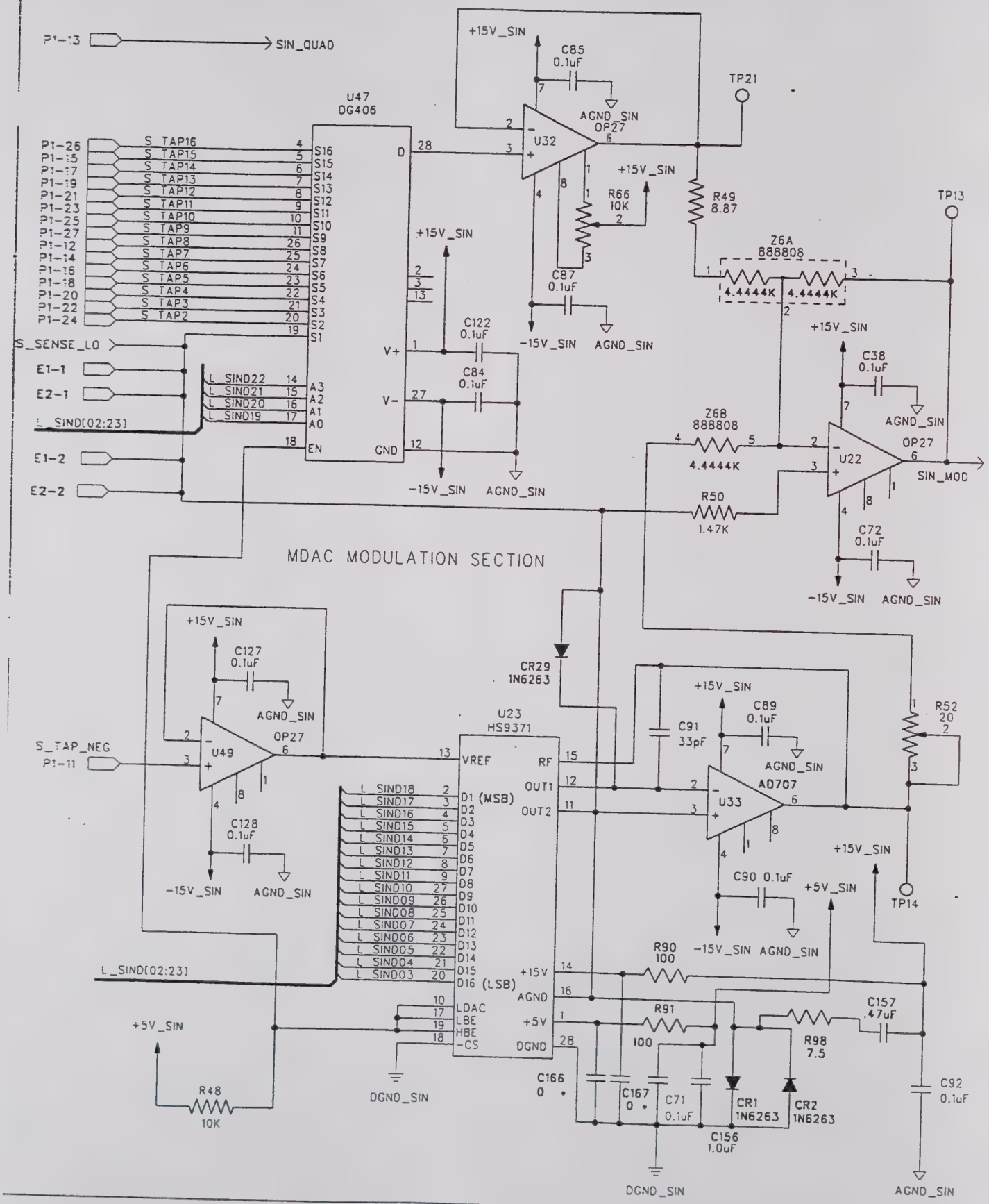
P1-13
SIN_QUAD
+15V_SIN
C85
0.1uF
AGND_SIN
OP27
U32
TP21
U47
DG406
P1-26
P1-15
P1-17
P1-19
P1-21
P1-23
P1-25
P1-27
P1-12
P1-14
P1-16
P1-18
P1-20
P1-22
P1-24
S_TAP16
S_TAP15
S_TAP14
S_TAP13
S_TAP12
S_TAP11
S_TAP10
S_TAP9
S_TAP8
S_TAP7
S_TAP6
S_TAP5
S_TAP4
S_TAP3
S_TAP2
S16
S15
S14
S13
S12
S11
S10
S9
S8
S7
S6
S5
S4
S3
S2
S1
D
R66
10K
R49
8.87
TP13
Z6A
888808
4.4444K
4.4444K
C87
0.1uF
-15V_SIN
AGND_SIN
S_SENSE_LO
E1-1
E2-1
L_SIND[02:23]
L_SIND22
L_SIND21
L_SIND20
L_SIND19
A3
A2
A1
A0
EN
E1-2
E2-2
V+
V-
GND
C122
0.1uF
C84
0.1uF
C38
0.1uF
Z6B
888808
4.4444K
U22
OP27
SIN_MOD
R50
1.47K
C72
0.1uF
MDAC MODULATION SECTION
C127
0.1uF
U49
OP27
S_TAP_NEG
P1-11
C128
0.1uF
CR29
1N6263
U23
HS9371
VREF
D1 (MSB)
D2
D3
D4
D5
D6
D7
D8
D9
D10
D11
D12
D13
D14
D15
D16 (LSB)
L_SIND18
L_SIND17
L_SIND16
L_SIND15
L_SIND14
L_SIND13
L_SIND12
L_SIND11
L_SIND10
L_SIND09
L_SIND08
L_SIND07
L_SIND06
L_SIND05
L_SIND04
L_SIND03
RF
OUT1
OUT2
C91
33pF
C89
0.1uF
AD707
U33
R52
20
C90 0.1uF
+5V_SIN
TP14
R90
100
+15V
AGND
+5V
DGND
LDAC
LBE
HBE
-CS
R91
100
R98
7.5
C157
.47uF
C92
0.1uF
C166
0
C167
0
C71
0.1uF
C156
1.0uF
CR1
1N6263
CR2
1N6263
DGND_SIN
R48
10K

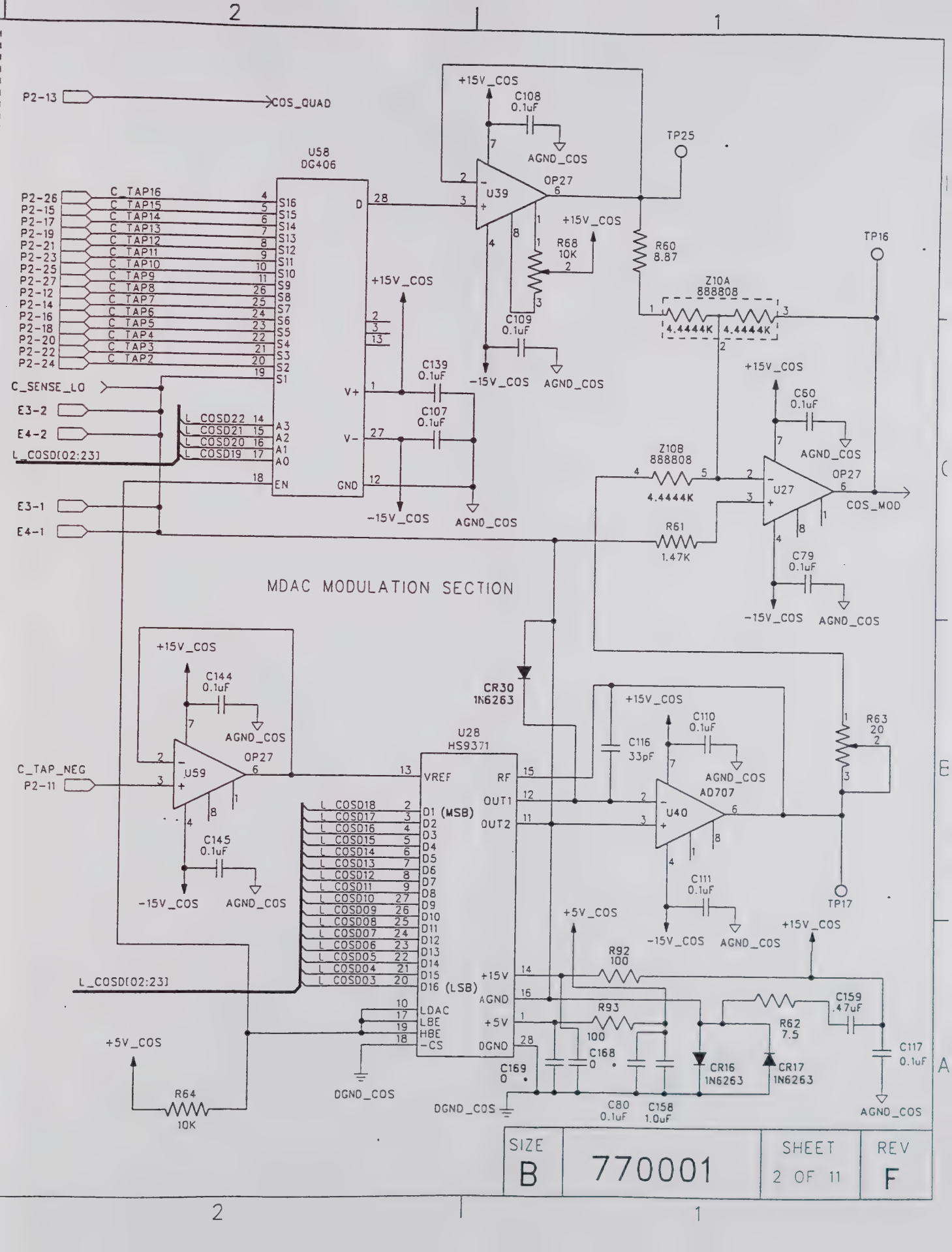
P2-13
COS_QUAD
U58
DG406
P2-26
P2-15
P2-17
P2-19
P2-21
P2-23
P2-25
P2-27
P2-12
P2-14
P2-16
P2-18
P2-20
P2-22
P2-24
C_TAP16
C_TAP15
C_TAP14
C_TAP13
C_TAP12
C_TAP11
C_TAP10
C_TAP9
C_TAP8
C_TAP7
C_TAP6
C_TAP5
C_TAP4
C_TAP3
C_TAP2
S16
S15
S14
S13
S12
S11
S10
S9
S8
S7
S6
S5
S4
S3
S2
S1
D
V+
V-
GND
EN
A3
A2
A1
A0
C_SENSE_LO
E3-2
E4-2
L_COSD[02:23]
L_COSD22
L_COSD21
L_COSD20
L_COSD19
E3-1
E4-1
+15V_COS
C108
0.1uF
AGND_COS
U39
OP27
TP25
R68
10K
R60
8.87
TP16
Z10A
888808
4.4444K
C109
0.1uF
-15V_COS
C139
0.1uF
C107
0.1uF
C60
0.1uF
Z10B
888808
U27
OP27
COS_MOD
R61
1.47K
C79
0.1uF
MDAC MODULATION SECTION
CR30
1N6263
C144
0.1uF
U59
OP27
C_TAP_NEG
P2-11
C145
0.1uF
U28
HS9371
VREF
D1 (MSB)
D16 (LSB)
RF
OUT1
OUT2
+15V
AGND
+5V
DGND
LDAC
LBE
HBE
-CS
C116
33pF
C110
0.1uF
AD707
U40
R63
20
TP17
C111
0.1uF
+5V_COS
R92
100
R93
100
C159
.47uF
R62
7.5
C168
0
C169
0
CR16
1N6263
CR17
1N6263
C117
0.1uF
C80
0.1uF
C158
1.0uF
DGND_COS
R64
10K
SIZE
B
770001
SHEET
2 OF 11
REV
F

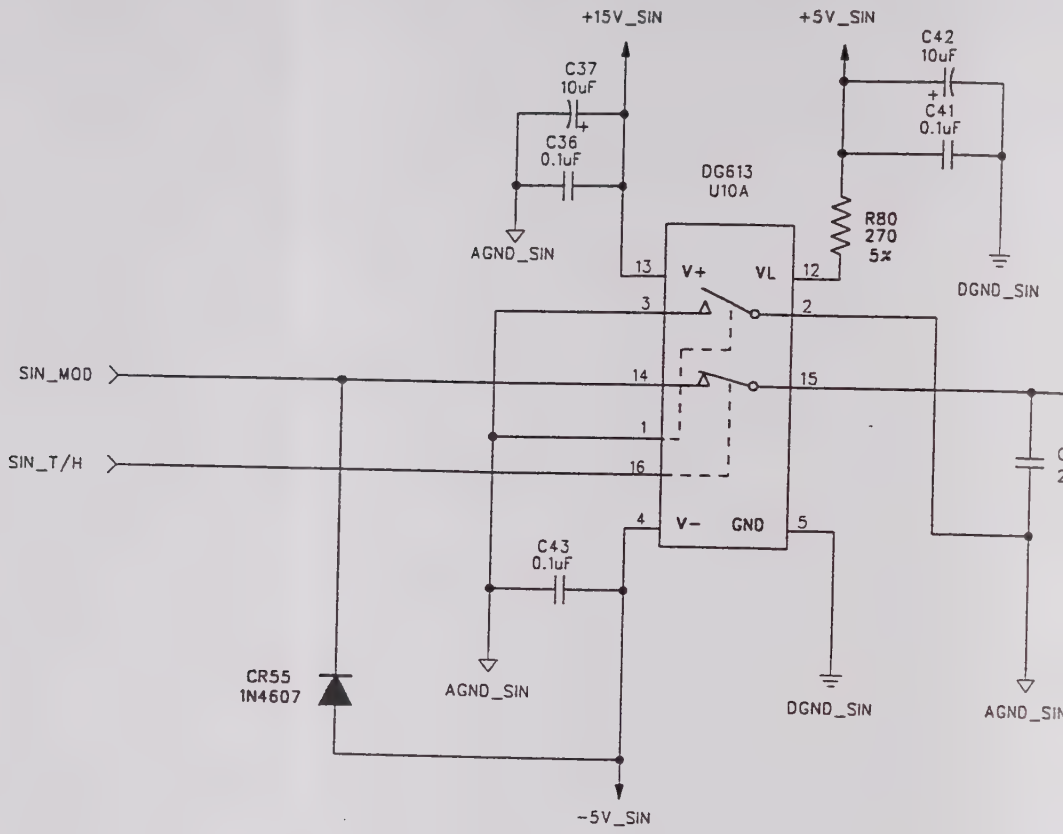
+15V_SIN
+5V_SIN
C37
10uF
C36
0.1uF
C42
10uF
C41
0.1uF
DG613
U10A
R80
270
5%
AGND_SIN
DGND_SIN
V+
VL
V-
GND
SIN_MOD
SIN_T/H
C43
0.1uF
CR55
1N4607
AGND_SIN
DGND_SIN
AGND_SIN
-5V_SIN

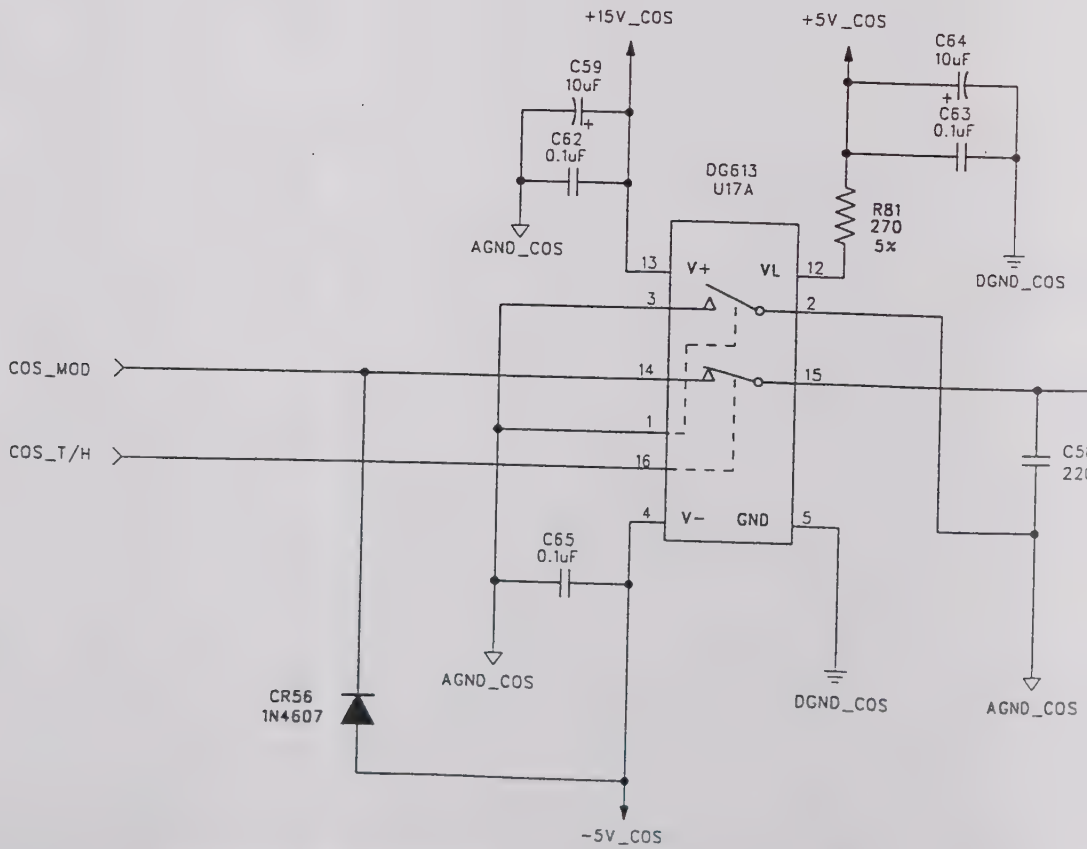
+15V_COS
+5V_COS
C59
10uF
C62
0.1uF
C64
10uF
C63
0.1uF
DG613
U17A
R81
270
5%
AGND_COS
DGND_COS
V+
VL
V-
GND
COS_MOD
COS_T/H
C65
0.1uF
CR56
1N4607
AGND_COS
DGND_COS
AGND_COS
-5V_COS

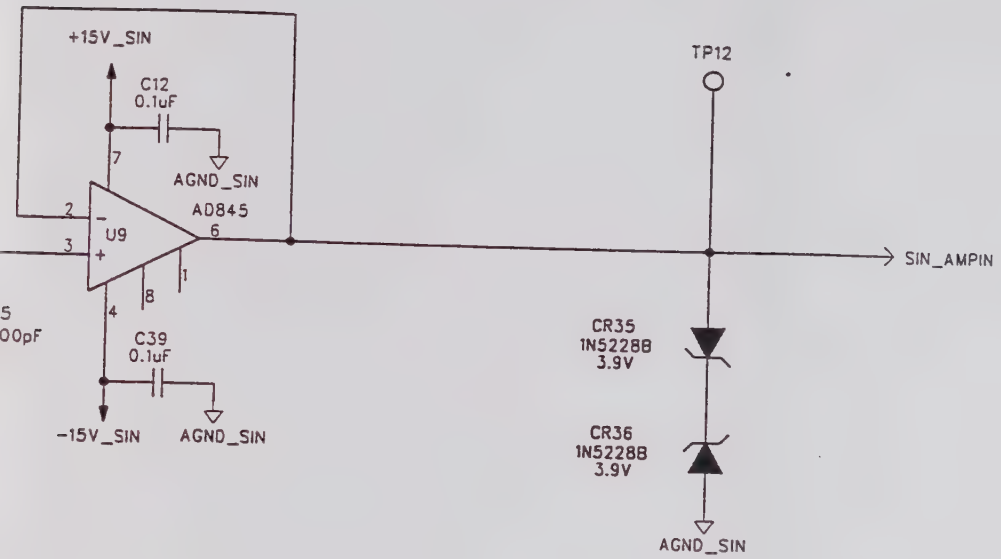

TRACK-HOLD DEGLITCHER

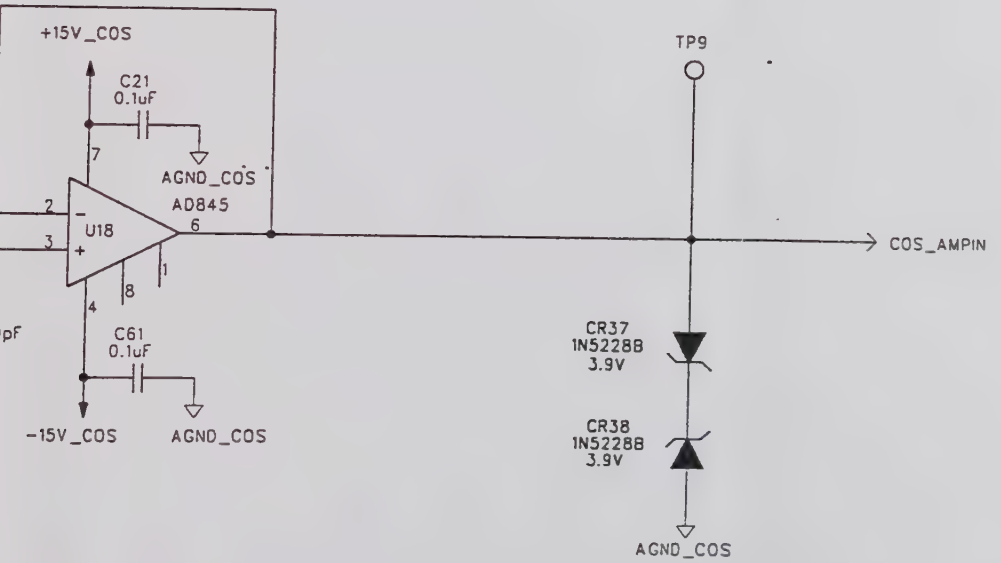

TRACK-HOLD DEGLITCHER

SIZE		SHEET	REV
B	770001	3 OF 11	F

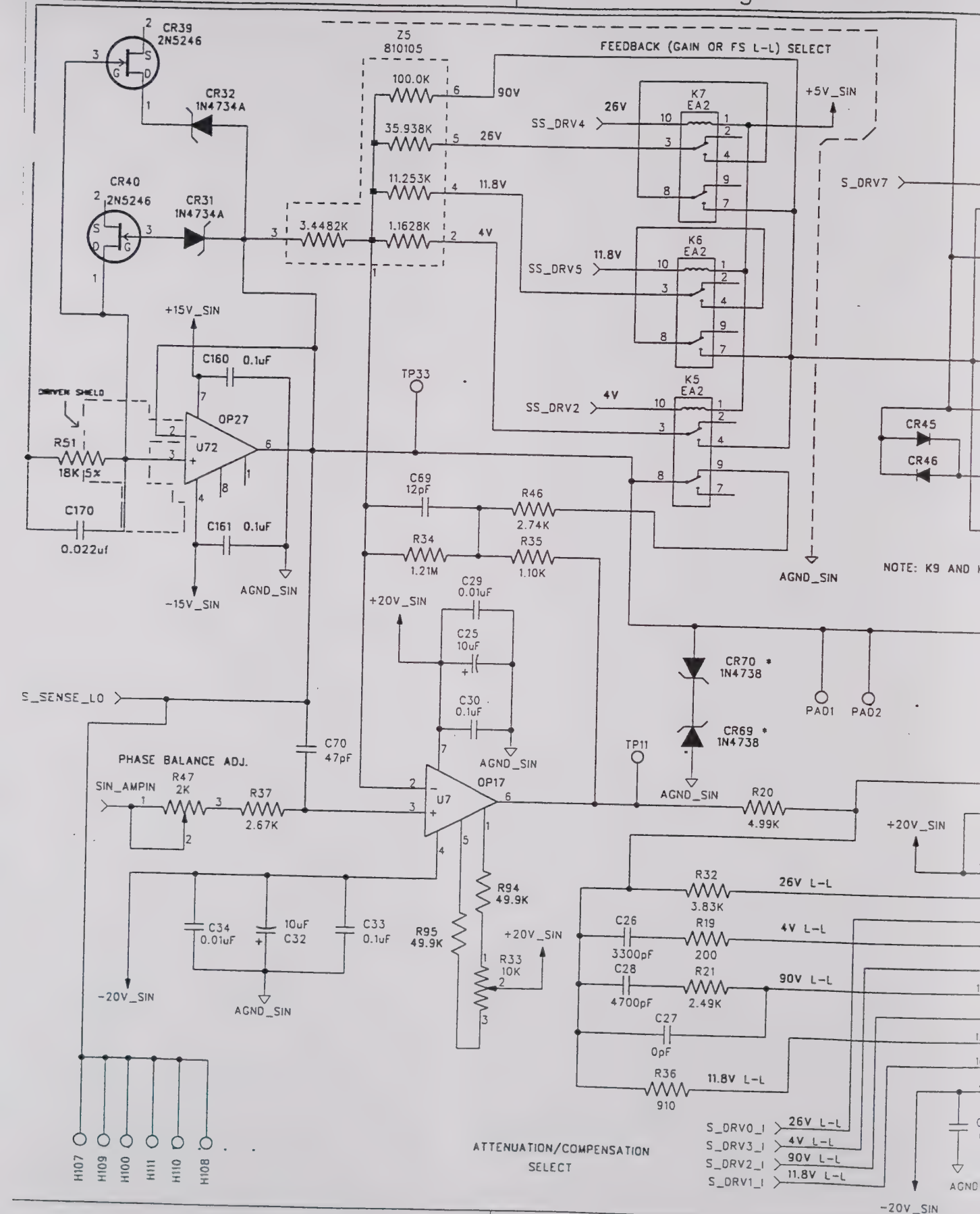
CR39 2N5246
CR32 1N4734A
CR40 2N5246
CR31 1N4734A
Z5 810105
FEEDBACK (GAIN OR FS L-L) SELECT
100.0K
90V
35.938K
26V
11.253K
11.8V
3.4482K
1.1628K
4V
K7 EA2
K6 EA2
K5 EA2
SS_DRV4
SS_DRV5
SS_DRV2
+5V_SIN
S_DRV7
+15V_SIN
C160 0.1uF
DRIVEN SHIELD
OP27
U72
R51 18K 5%
C170 0.022uf
C161 0.1uF
-15V_SIN
AGND_SIN
TP33
C69 12pF
R46 2.74K
R34 1.21M
R35 1.10K
C29 0.01uF
C25 10uF
C30 0.1uF
+20V_SIN
CR45
CR46
CR70 * 1N4738
CR69 * 1N4738
PAD1
PAD2
TP11
S_SENSE_LO
PHASE BALANCE ADJ.
SIN_AMPIN
R47 2K
R37 2.67K
C70 47pF
OP17
U7
R20 4.99K
R32 3.83K
26V L-L
C26 3300pF
R19 200
4V L-L
C28 4700pF
R21 2.49K
90V L-L
C27 0pF
R36 910
11.8V L-L
C34 0.01uF
10uF C32
C33 0.1uF
R95 49.9K
R94 49.9K
R33 10K
-20V_SIN
H107
H109
H100
H111
H110
H108
ATTENUATION/COMPENSATION SELECT
S_DRV0_I
S_DRV3_I
S_DRV2_I
S_DRV1_I
NOTE: K9 AND

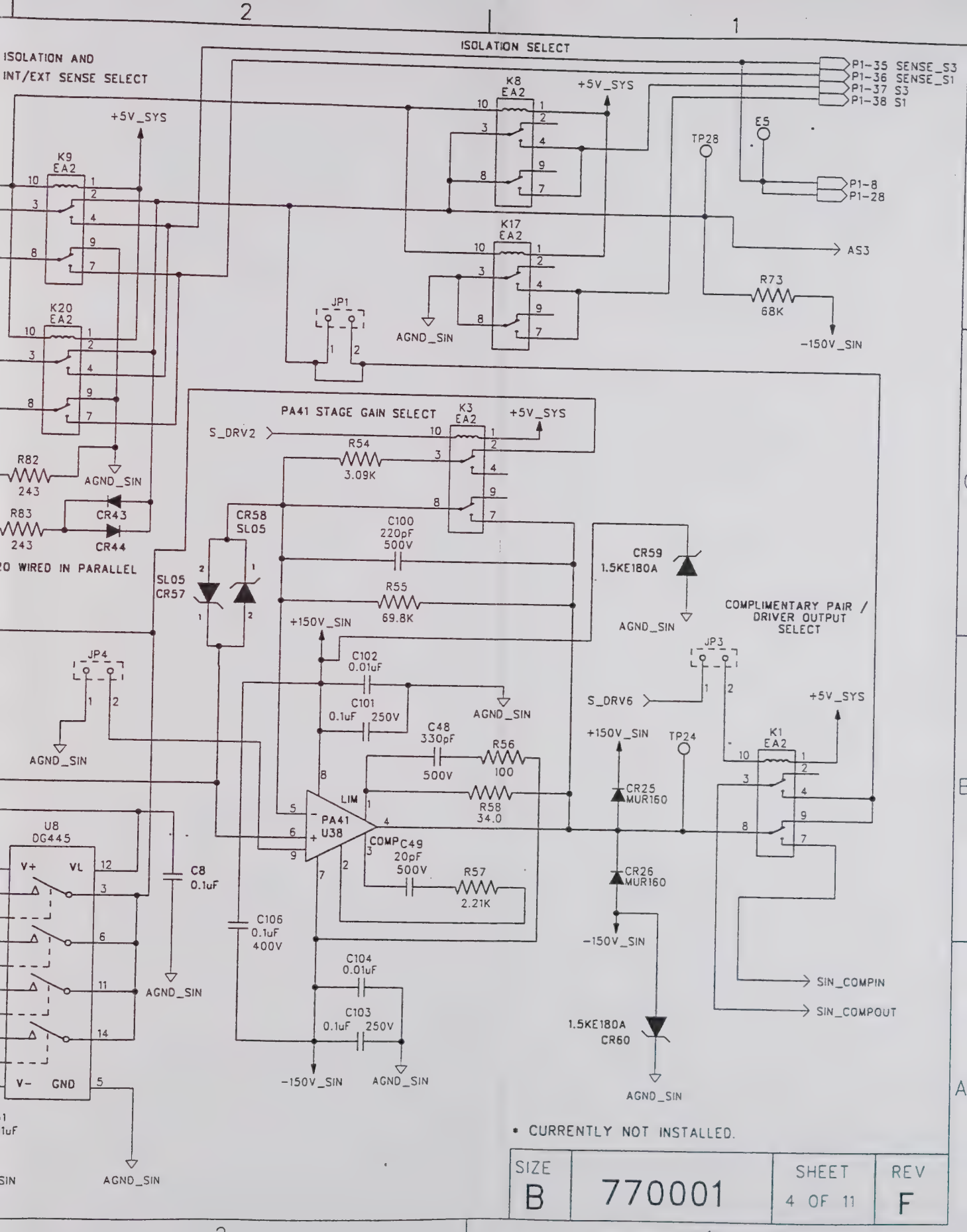
ISOLATION AND
INT/EXT SENSE SELECT
ISOLATION SELECT
+5V_SYS
K8
EA2
K9
EA2
K17
EA2
K20
EA2
P1-35 SENSE_S3
P1-36 SENSE_S1
P1-37 S3
P1-38 S1
E5
TP28
P1-8
P1-28
AS3
R73
68K
-150V_SIN
JP1
AGND_SIN
PA41 STAGE GAIN SELECT
K3
EA2
S_DRV2
R54
3.09K
R82
243
R83
243
CR43
CR44
20 WIRED IN PARALLEL
CR58
SL05
SL05
CR57
C100
220pF
500V
R55
69.8K
CR59
1.5KE180A
COMPLIMENTARY PAIR /
DRIVER OUTPUT
SELECT
JP3
S_DRV6
JP4
+150V_SIN
C102
0.01uF
C101
0.1uF 250V
C48
330pF
500V
R56
100
R58
34.0
LIM
PA41
U38
COMP
C49
20pF
500V
R57
2.21K
TP24
K1
EA2
CR25
MUR160
CR26
MUR160
U8
DG445
V+
VL
V-
GND
C8
0.1uF
C106
0.1uF
400V
C104
0.01uF
C103
0.1uF 250V
SIN_COMPIN
SIN_COMPOUT
1.5KE180A
CR60
• CURRENTLY NOT INSTALLED.
SIZE
B
770001
SHEET
4 OF 11
REV
F

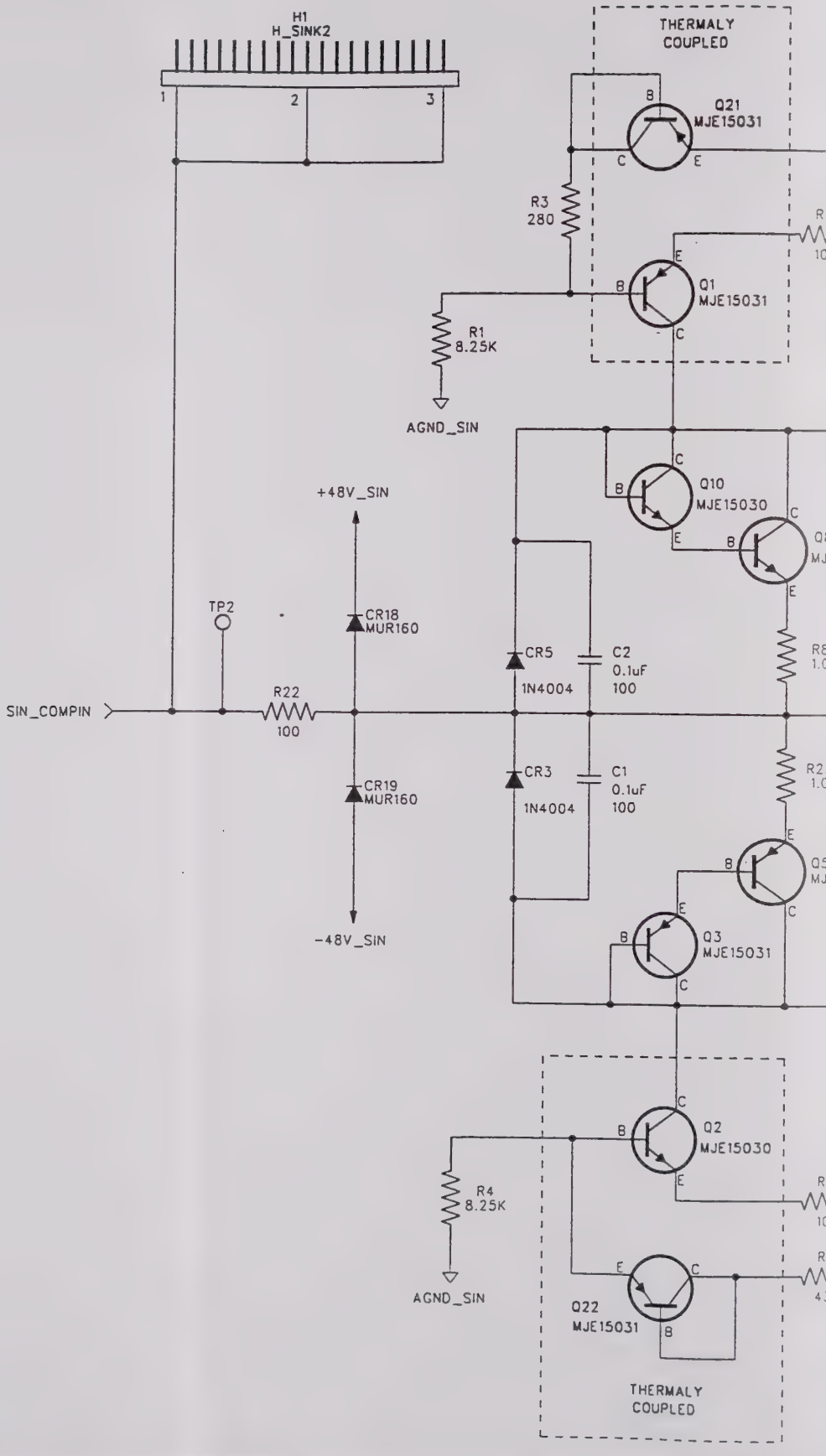
H1
H_SINK2
1
2
3
THERMALY
COUPLED
Q21
MJE15031
C
B
E
R3
280
Q1
MJE15031
R1
8.25K
AGND_SIN
Q10
MJE15030
+48V_SIN
TP2
CR18
MUR160
CR5
1N4004
C2
0.1uF
100
SIN_COMPIN
R22
100
CR19
MUR160
CR3
1N4004
C1
0.1uF
100
Q3
MJE15031
-48V_SIN
Q2
MJE15030
R4
8.25K
AGND_SIN
Q22
MJE15031
THERMALY
COUPLED

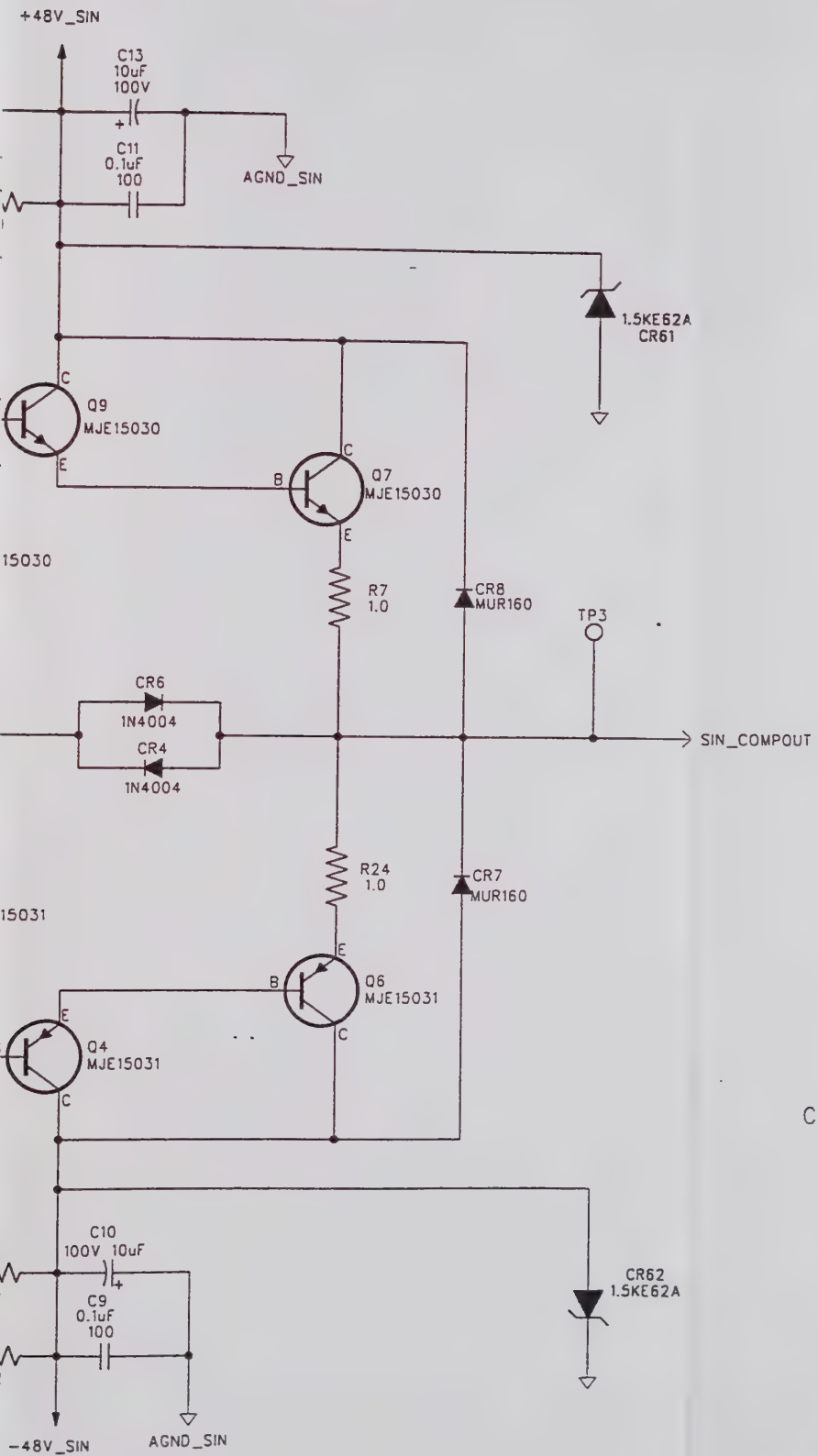

COMPLIMENTARY PAIR DRIVER

SIZE		SHEET	REV
B	770001	5 OF 11	F

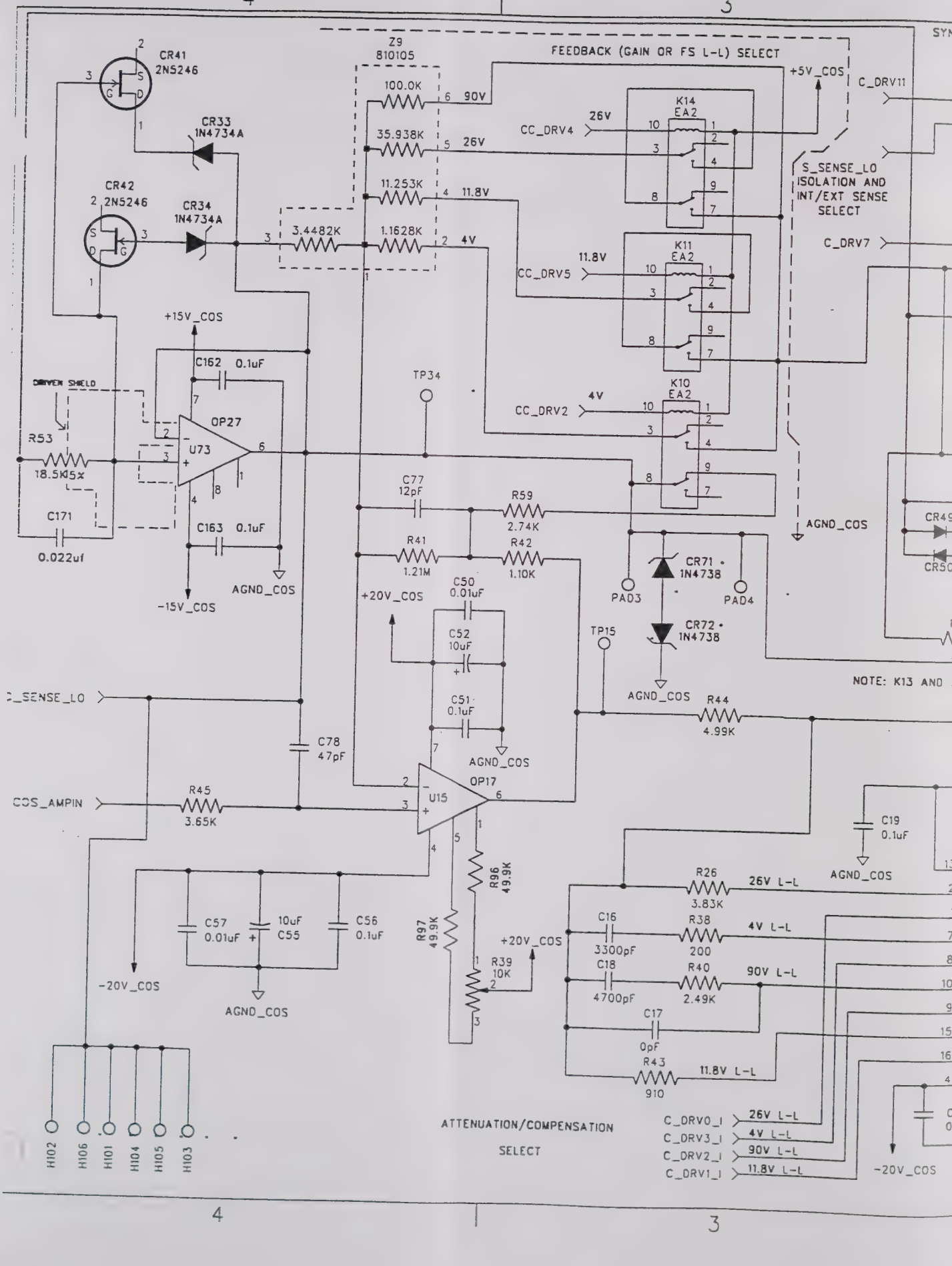
CR41 2N5246
CR42 2N5246
CR33 1N4734A
CR34 1N4734A
Z9 810105
100.0K
35.938K
11.253K
3.4482K
1.1628K
90V
26V
11.8V
4V
FEEDBACK (GAIN OR FS L-L) SELECT
+5V_COS
K14 EA2
K11 EA2
K10 EA2
CC_DRV4
CC_DRV5
CC_DRV2
C_DRV11
C_DRV7
S_SENSE_LO ISOLATION AND INT/EXT SENSE SELECT
AGND_COS
+15V_COS
-15V_COS
C162 0.1uF
C163 0.1uF
C171 0.022uf
R53 18.5K 5x
OP27 U73
TP34
C77 12pF
R59 2.74K
R41 1.21M
R42 1.10K
CR71 1N4738
CR72 1N4738
PAD3
PAD4
C50 0.01uF
C52 10uF
C51 0.1uF
+20V_COS
TP15
R44 4.99K
C78 47pF
R45 3.65K
OP17 U15
COS_AMPIN
C19 0.1uF
R26 3.83K
26V L-L
C16 3300pF
R38 200
4V L-L
C18 4700pF
R40 2.49K
90V L-L
C17 0pF
R43 910
11.8V L-L
C57 0.01uF
10uF C55
C56 0.1uF
R96 49.9K
R97 49.9K
R39 10K
-20V_COS
H102
H106
H101
H104
H105
H103
ATTENUATION/COMPENSATION SELECT
C_DRV0_I
C_DRV3_I
C_DRV2_I
C_DRV1_I
NOTE: K13 AND

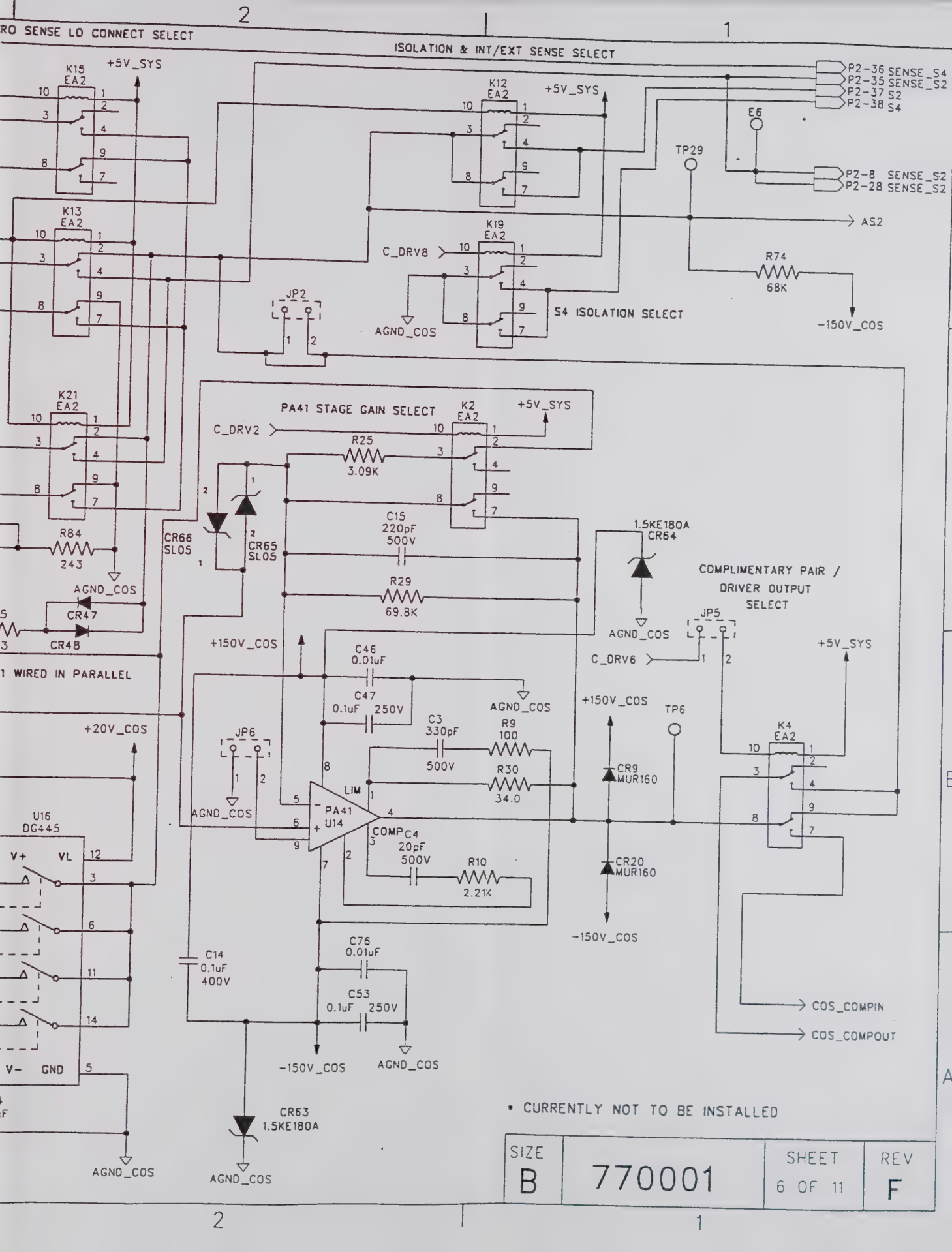
RO SENSE LO CONNECT SELECT
ISOLATION & INT/EXT SENSE SELECT
K15 EA2
+5V_SYS
K12 EA2
P2-36 SENSE_S4
P2-35 SENSE_S2
P2-37 S2
P2-38 S4
E6
TP29
P2-8 SENSE_S2
P2-28 SENSE_S2
AS2
K13 EA2
K19 EA2
C_DRV8
R74
68K
JP2
AGND_COS
S4 ISOLATION SELECT
-150V_COS
PA41 STAGE GAIN SELECT
K2 EA2
C_DRV2
R25
3.09K
K21 EA2
C15
220pF
500V
1.5KE180A
CR64
CR66
SL05
CR65
SL05
R84
243
R29
69.8K
COMPLIMENTARY PAIR / DRIVER OUTPUT SELECT
JP5
C_DRV6
AGND_COS
CR47
CR48
+150V_COS
C46
0.01uF
C47
0.1uF 250V
+5V_SYS
1 WIRED IN PARALLEL
+20V_COS
JP6
C3
330pF
500V
R9
100
R30
34.0
TP6
K4 EA2
CR9
MUR160
LIM
PA41
U14
COMP
C4
20pF
500V
R10
2.21K
CR20
MUR160
U16
DG445
V+
VL
V-
GND
C14
0.1uF
400V
C76
0.01uF
C53
0.1uF 250V
-150V_COS
AGND_COS
COS_COMPIN
COS_COMPOUT
CR63
1.5KE180A
• CURRENTLY NOT TO BE INSTALLED
SIZE
B
770001
SHEET
6 OF 11
REV
F

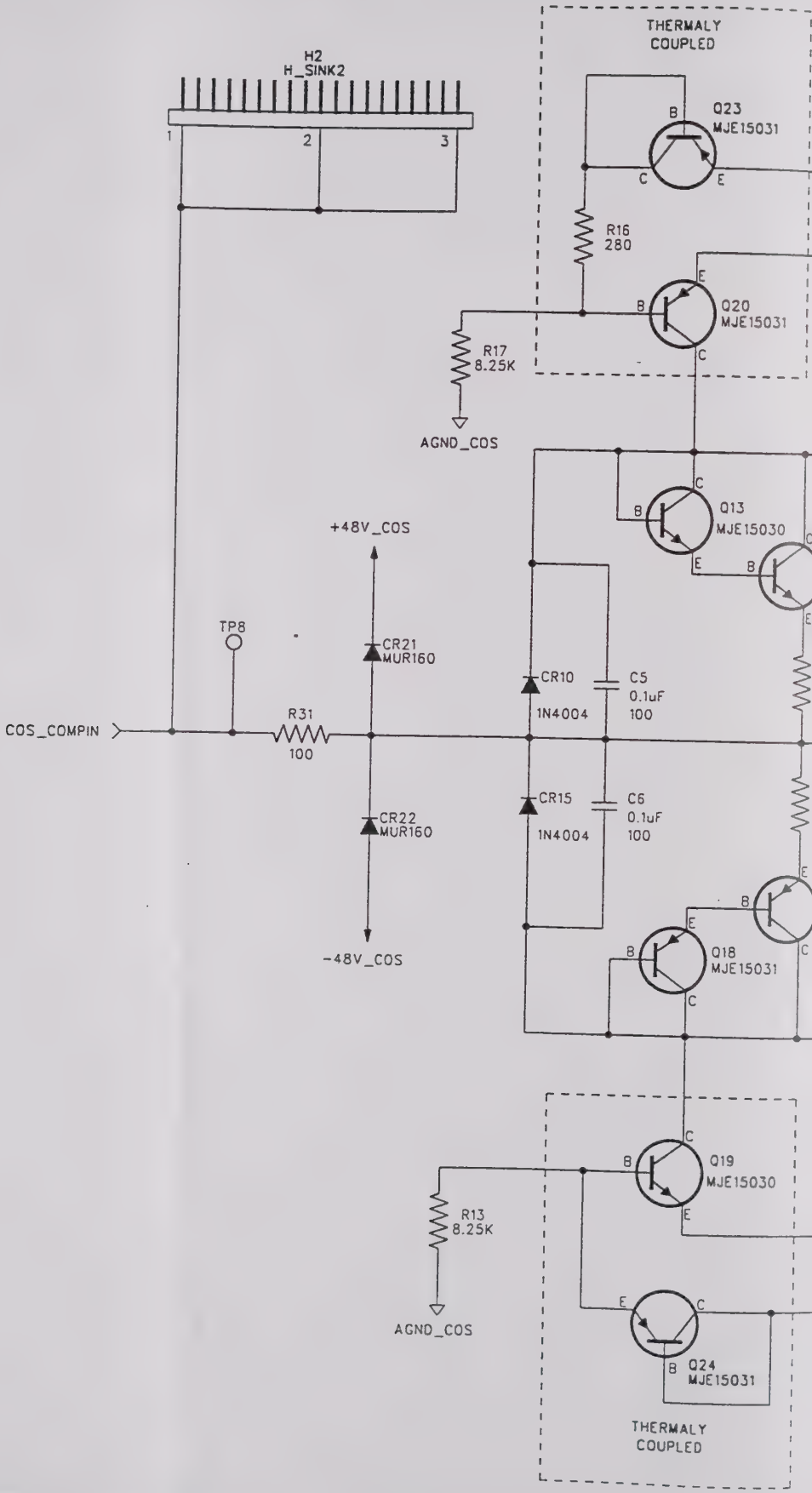
H2
H_SINK2
1
2
3
THERMALY
COUPLED
Q23
MJE15031
R16
280
Q20
MJE15031
R17
8.25K
AGND_COS
Q13
MJE15030
+48V_COS
TP8
CR21
MUR160
CR10
1N4004
C5
0.1uF
100
COS_COMPIN
R31
100
CR15
1N4004
C6
0.1uF
100
CR22
MUR160
-48V_COS
Q18
MJE15031
Q19
MJE15030
R13
8.25K
AGND_COS
Q24
MJE15031
THERMALY
COUPLED

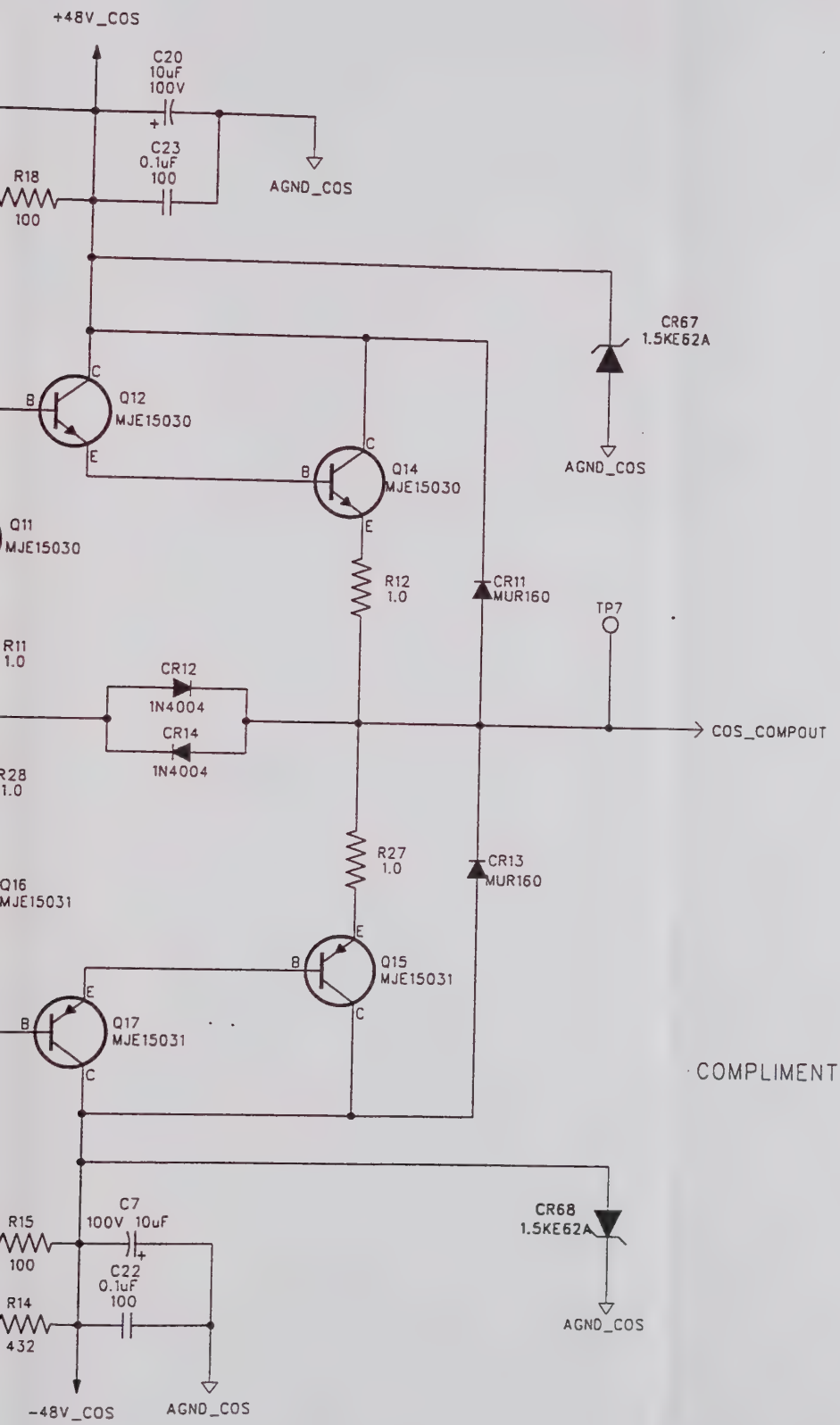

SIZE		SHEET	REV
B	770001	7 OF 11	F

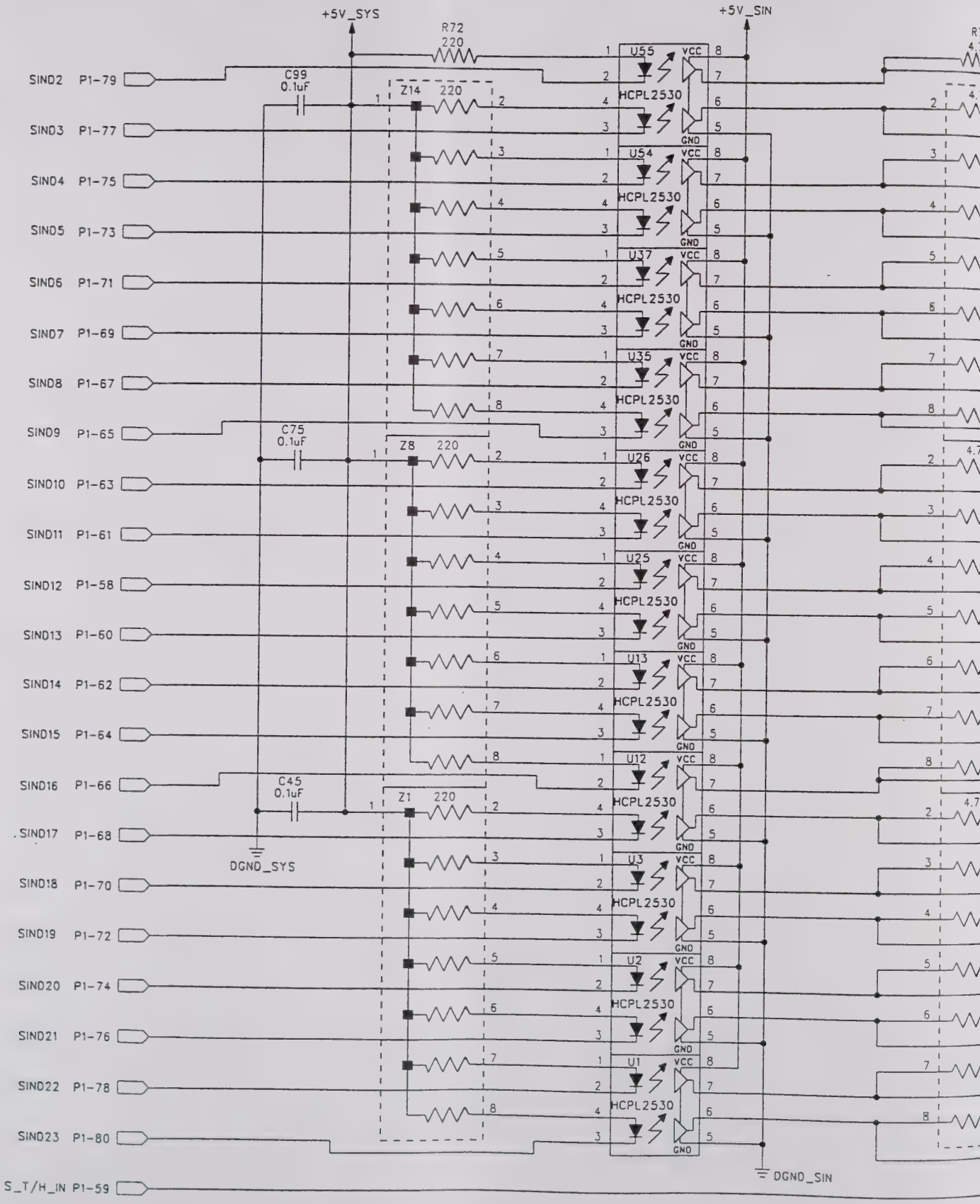
+5V_SYS
+5V_SIN
R72
220
C99
0.1uF
C75
0.1uF
C45
0.1uF
Z14 220
Z8 220
Z1 220
SIND2 P1-79
SIND3 P1-77
SIND4 P1-75
SIND5 P1-73
SIND6 P1-71
SIND7 P1-69
SIND8 P1-67
SIND9 P1-65
SIND10 P1-63
SIND11 P1-61
SIND12 P1-58
SIND13 P1-60
SIND14 P1-62
SIND15 P1-64
SIND16 P1-66
SIND17 P1-68
SIND18 P1-70
SIND19 P1-72
SIND20 P1-74
SIND21 P1-76
SIND22 P1-78
SIND23 P1-80
S_T/H_IN P1-59
U55
U54
U37
U35
U26
U25
U13
U12
U3
U2
U1
HCPL2530
VCC
GND
DGND_SYS
DGND_SIN

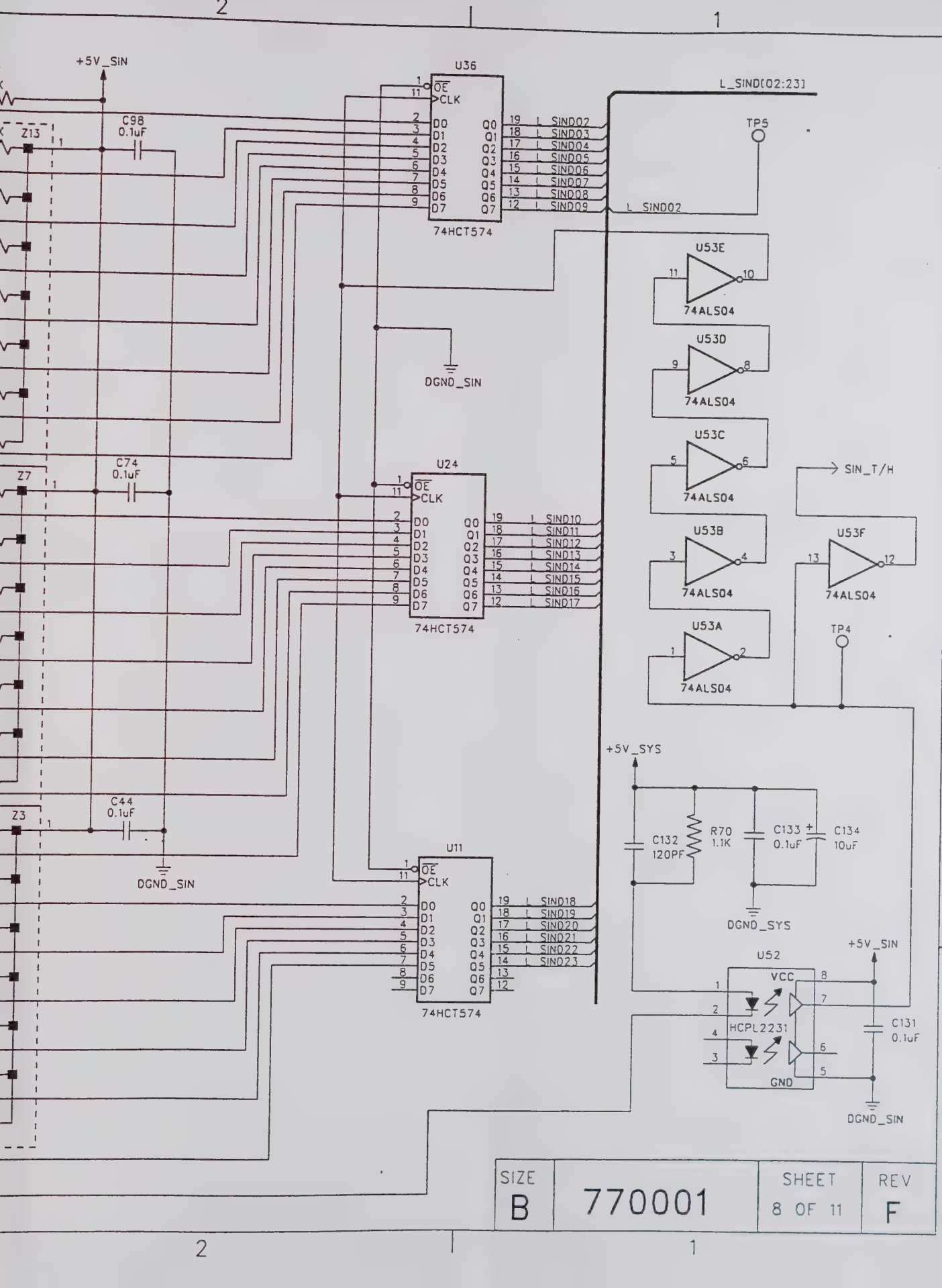
+5V_SIN
U36
OE
CLK
D0
D1
D2
D3
D4
D5
D6
D7
Q0
Q1
Q2
Q3
Q4
Q5
Q6
Q7
74HCT574
L_SIND02
L_SIND03
L_SIND04
L_SIND05
L_SIND06
L_SIND07
L_SIND08
L_SIND09
L_SIND[02:23]
TP5
C98
0.1uF
Z13
U53E
U53D
U53C
U53B
U53A
U53F
74ALS04
DGND_SIN
U24
C74
0.1uF
Z7
L_SIND10
L_SIND11
L_SIND12
L_SIND13
L_SIND14
L_SIND15
L_SIND16
L_SIND17
SIN_T/H
TP4
C44
0.1uF
Z3
U11
L_SIND18
L_SIND19
L_SIND20
L_SIND21
L_SIND22
L_SIND23
+5V_SYS
C132
120PF
R70
1.1K
C133
0.1uF
C134
10uF
DGND_SYS
U52
VCC
HCPL2231
GND
C131
0.1uF
SIZE
B
770001
SHEET
8 OF 11
REV
F

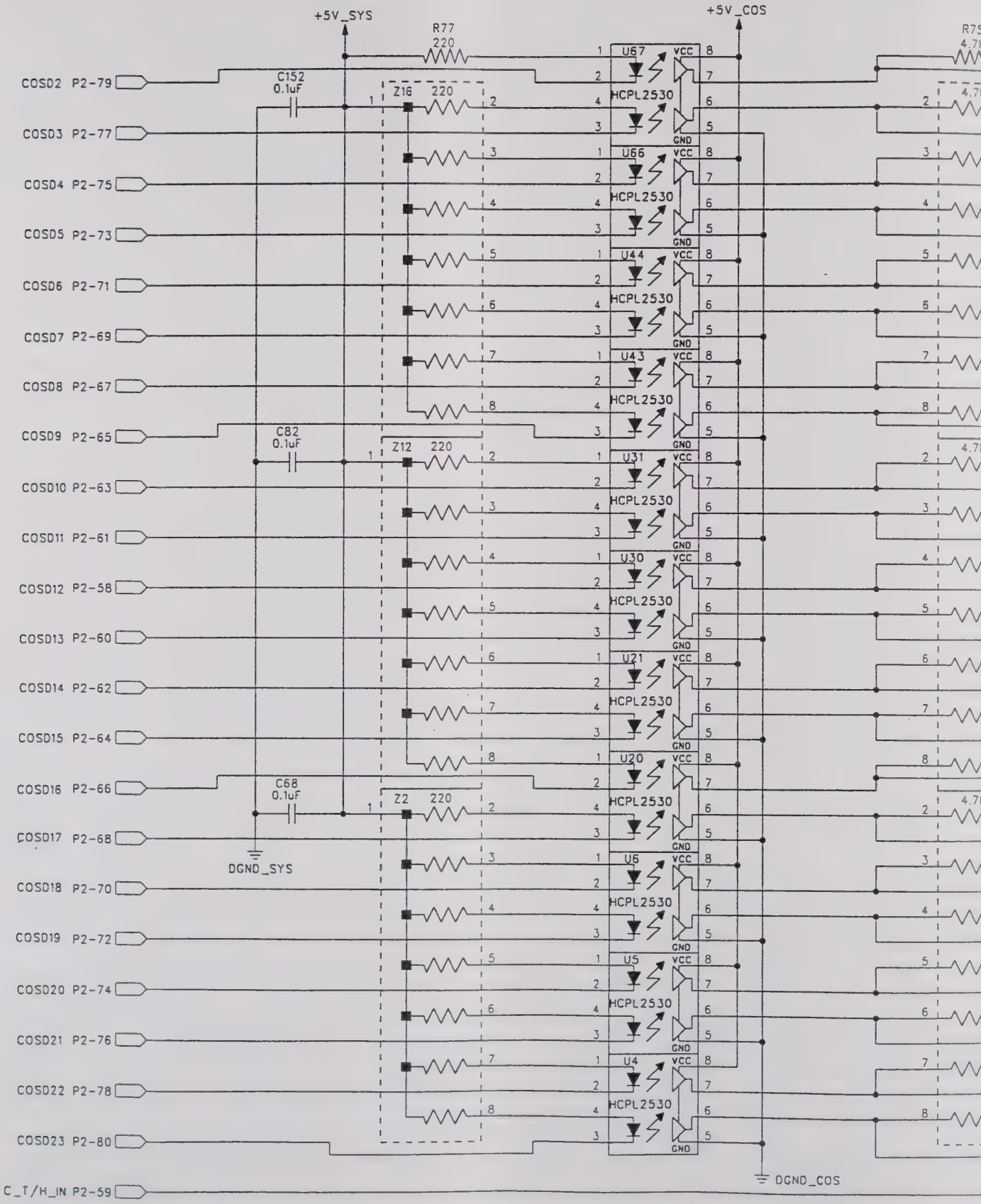
+5V_SYS
+5V_COS
R77
220
C152
0.1uF
C82
0.1uF
C68
0.1uF
Z16
Z12
Z2
220
U67
U66
U44
U43
U31
U30
U21
U20
U6
U5
U4
HCPL2530
VCC
GND
DGND_SYS
DGND_COS
COSD2 P2-79
COSD3 P2-77
COSD4 P2-75
COSD5 P2-73
COSD6 P2-71
COSD7 P2-69
COSD8 P2-67
COSD9 P2-65
COSD10 P2-63
COSD11 P2-61
COSD12 P2-58
COSD13 P2-60
COSD14 P2-62
COSD15 P2-64
COSD16 P2-66
COSD17 P2-68
COSD18 P2-70
COSD19 P2-72
COSD20 P2-74
COSD21 P2-76
COSD22 P2-78
COSD23 P2-80
C_T/H_IN P2-59

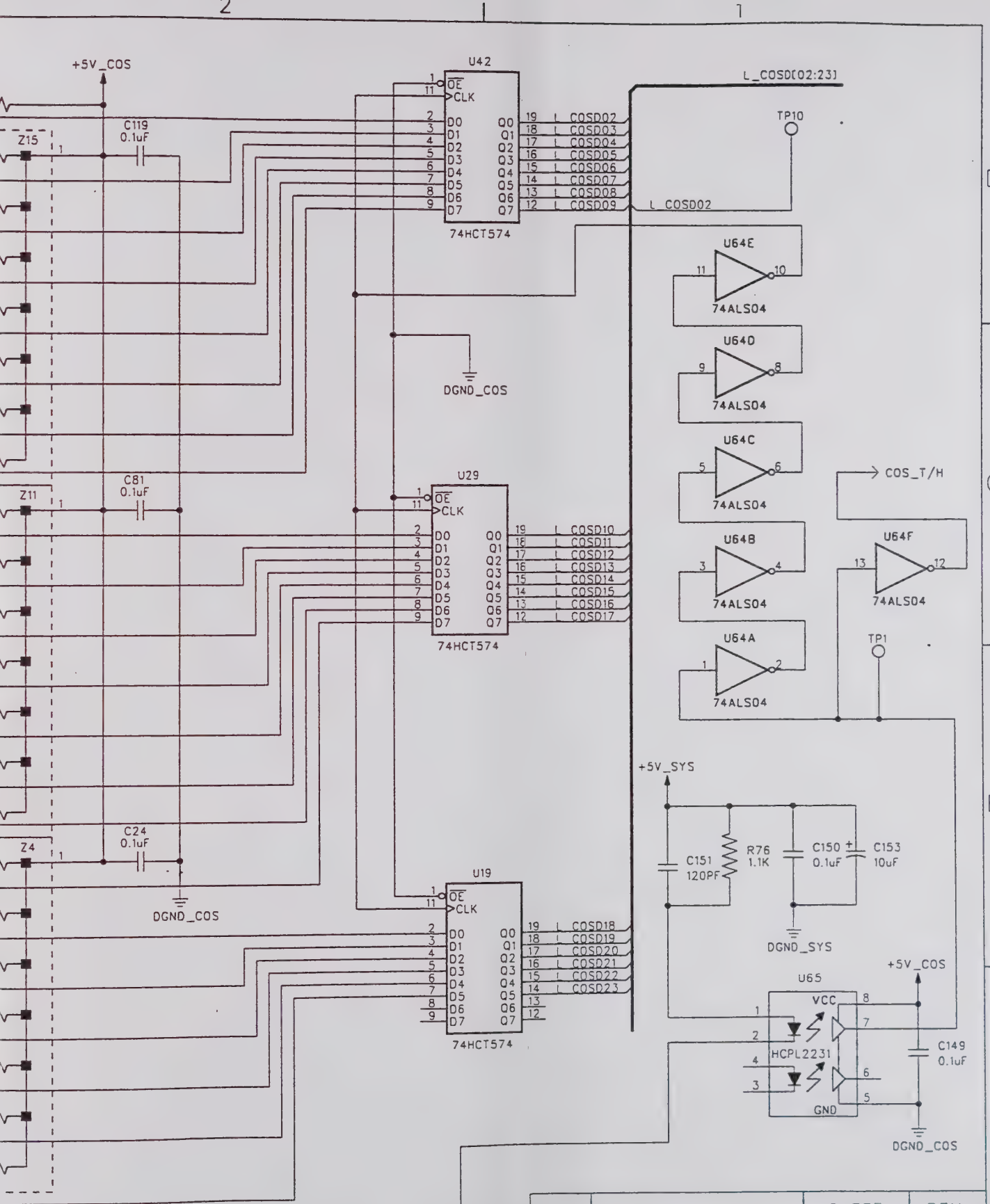

SIZE		SHEET	REV
B	770001	9 OF 11	F

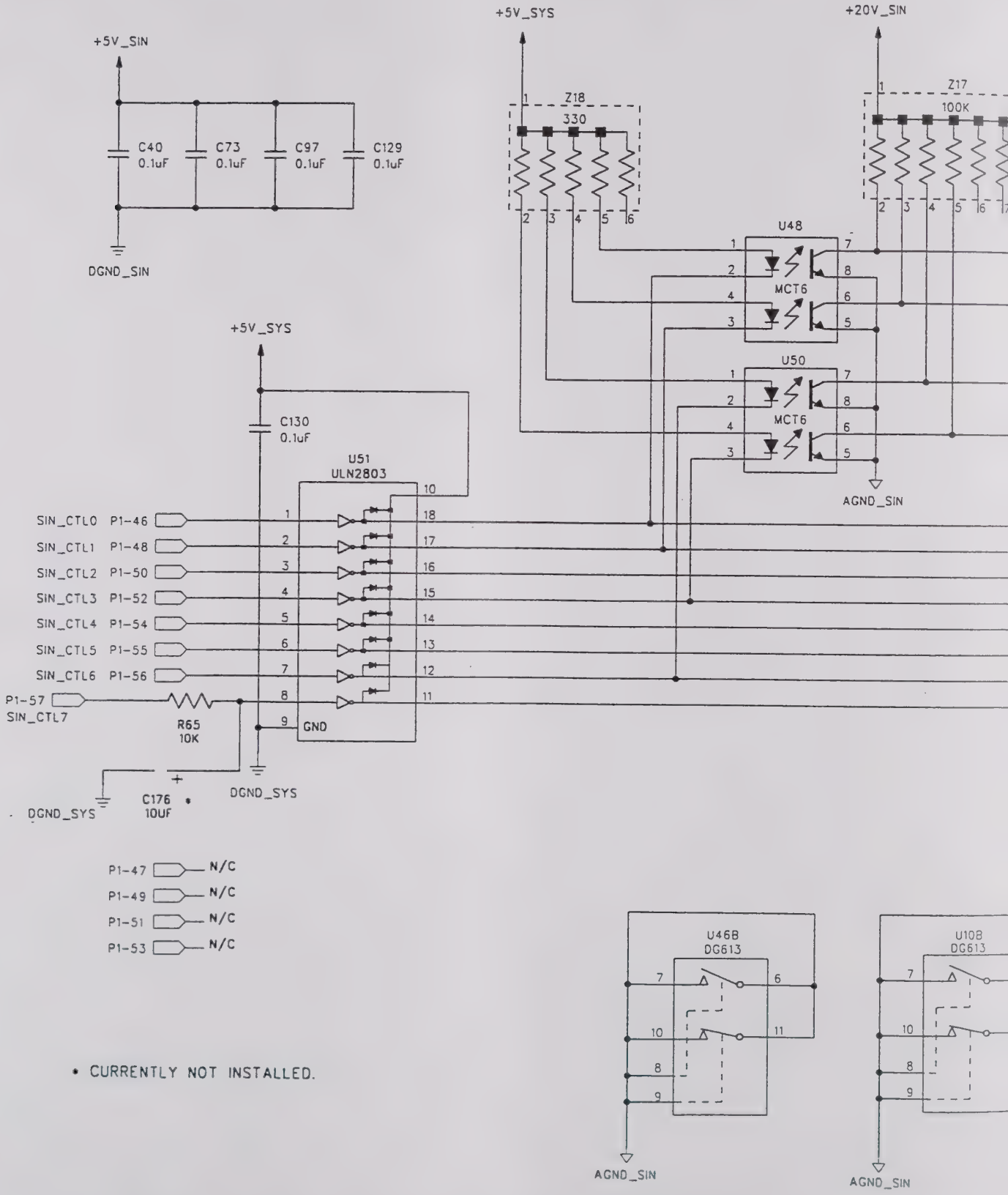

• CURRENTLY NOT INSTALLED.

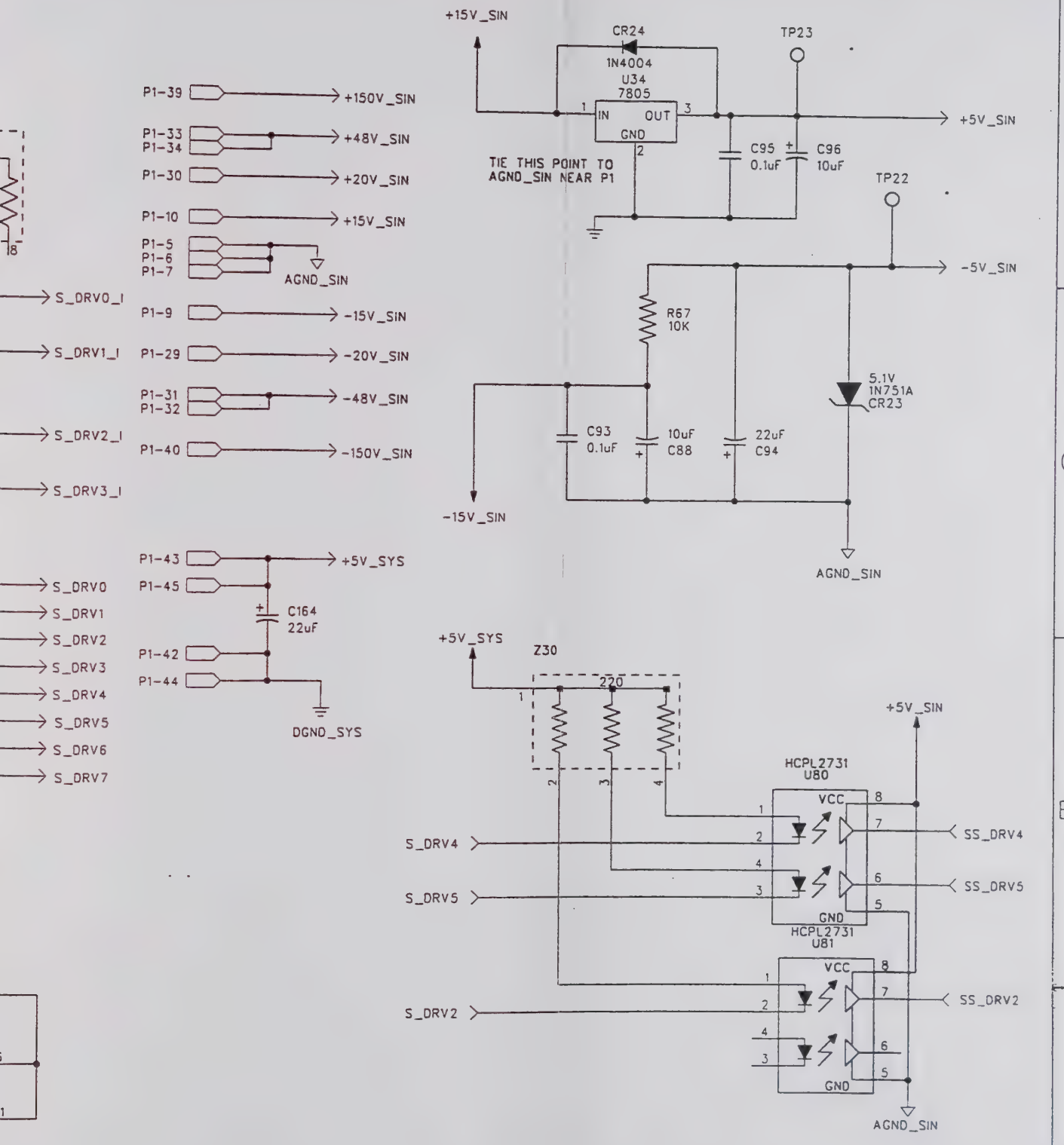

SIZE		SHEET	REV
B	770001	10 OF 11	F

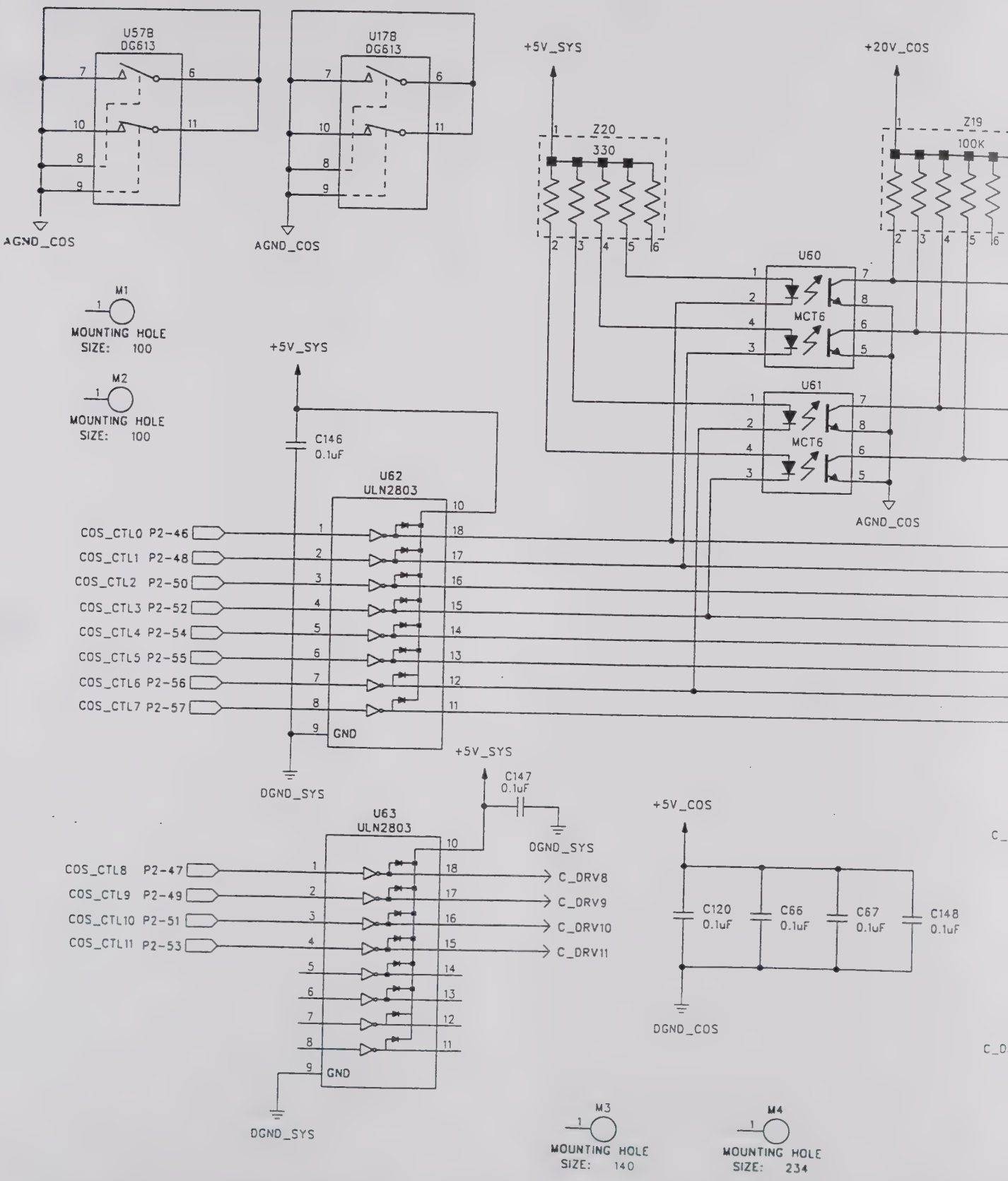
U57B
DG613
U178
DG613
AGND_COS
AGND_COS
+5V_SYS
Z20
330
+20V_COS
Z19
100K
U60
MCT6
U61
MCT6
AGND_COS
M1
MOUNTING HOLE
SIZE: 100
M2
MOUNTING HOLE
SIZE: 100
+5V_SYS
C146
0.1uF
U62
ULN2803
COS_CTL0 P2-46
COS_CTL1 P2-48
COS_CTL2 P2-50
COS_CTL3 P2-52
COS_CTL4 P2-54
COS_CTL5 P2-55
COS_CTL6 P2-56
COS_CTL7 P2-57
GND
DGND_SYS
+5V_SYS
C147
0.1uF
DGND_SYS
U63
ULN2803
COS_CTL8 P2-47
COS_CTL9 P2-49
COS_CTL10 P2-51
COS_CTL11 P2-53
C_DRV8
C_DRV9
C_DRV10
C_DRV11
GND
DGND_SYS
+5V_COS
C120
0.1uF
C66
0.1uF
C67
0.1uF
C148
0.1uF
DGND_COS
M3
MOUNTING HOLE
SIZE: 140
M4
MOUNTING HOLE
SIZE: 234

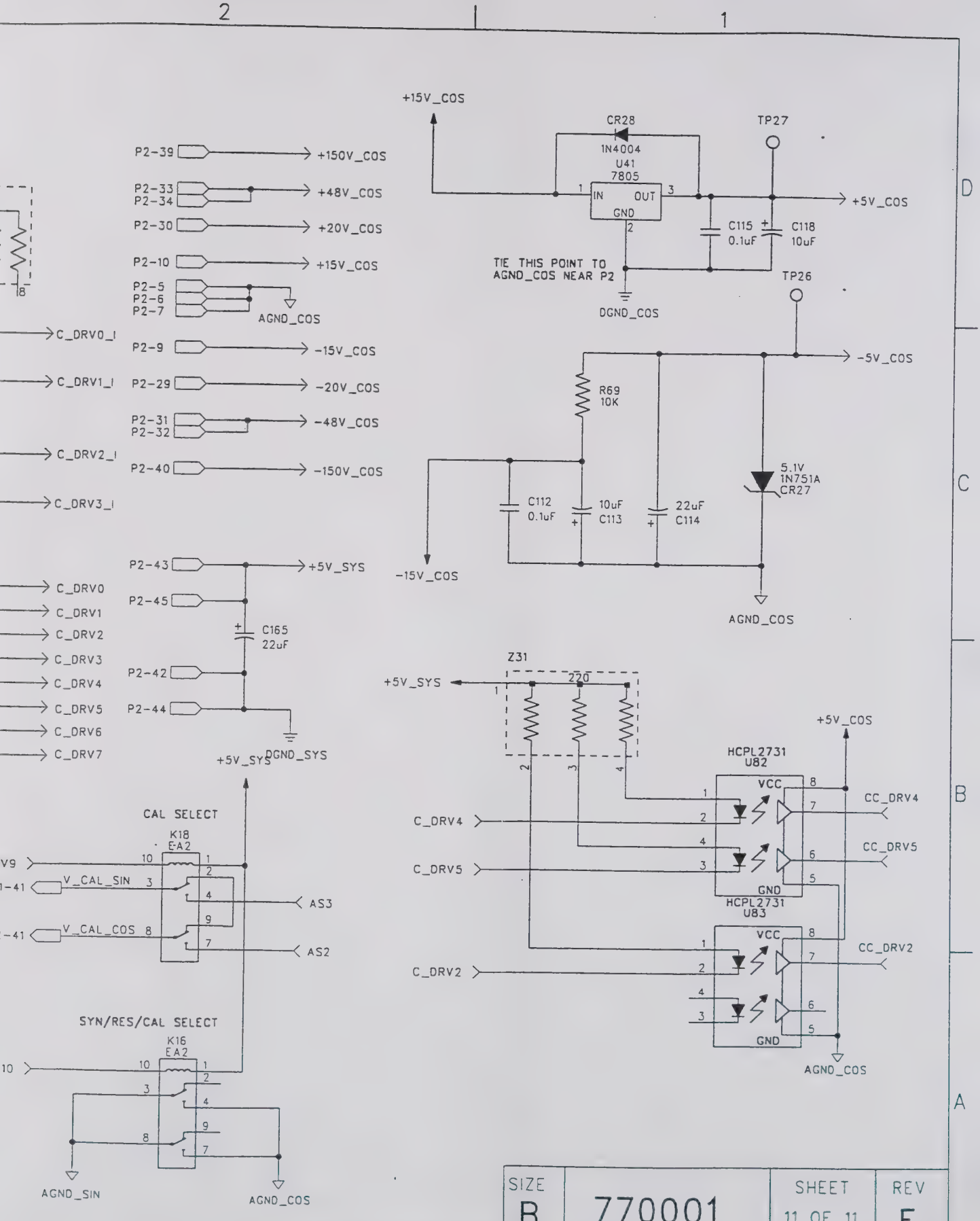

SIZE		SHEET	REV
B	770001	11 OF 11	F

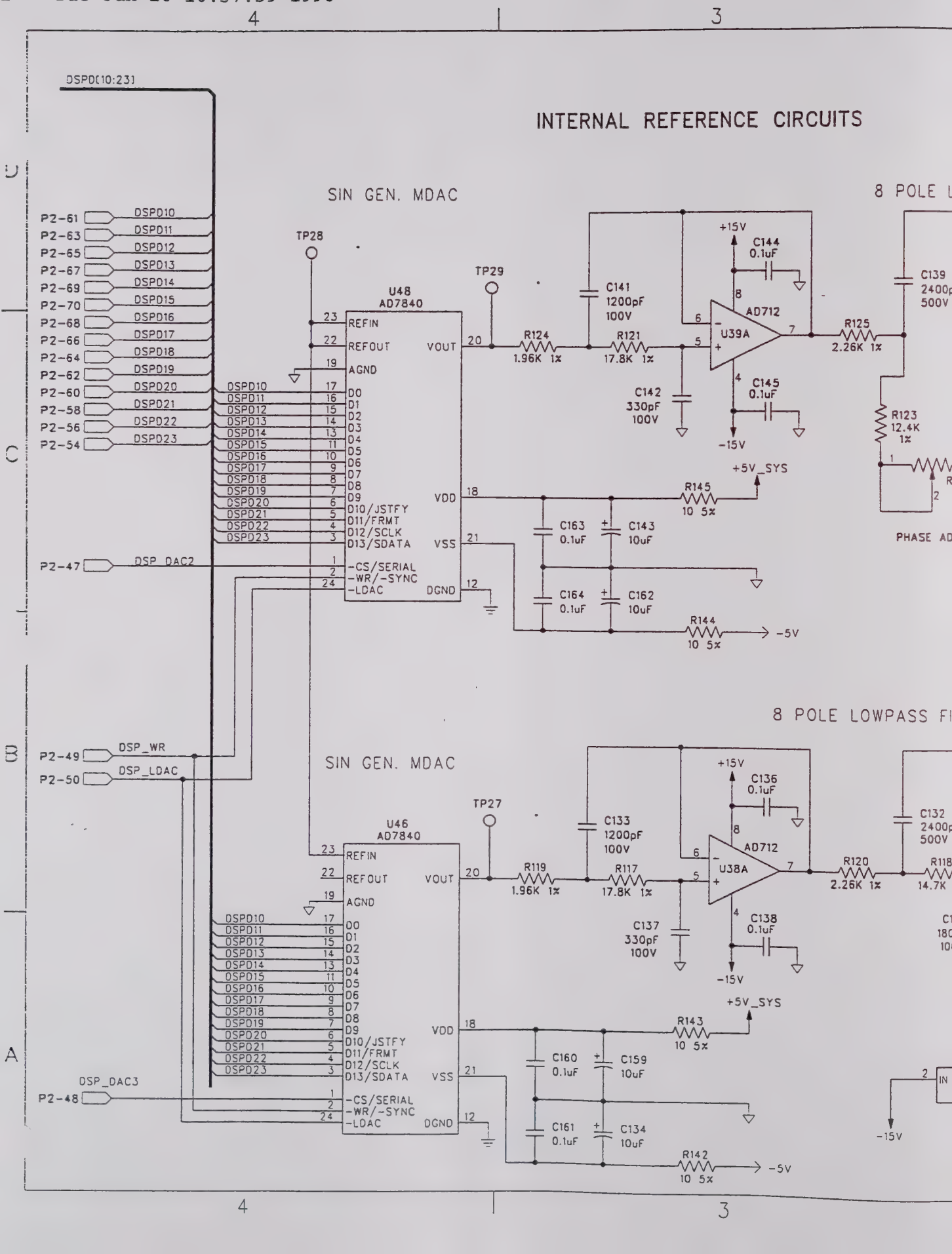
INTERNAL REFERENCE CIRCUITS
DSPD[10:23]
SIN GEN. MDAC
8 POLE L
TP28
TP29
U48
AD7840
REFIN
REFOUT
AGND
VOUT
VDD
VSS
DGND
-CS/SERIAL
-WR/-SYNC
-LDAC
D0
D1
D2
D3
D4
D5
D6
D7
D8
D9
D10/JSTFY
D11/FRMT
D12/SCLK
D13/SDATA
P2-61 DSPD10
P2-63 DSPD11
P2-65 DSPD12
P2-67 DSPD13
P2-69 DSPD14
P2-70 DSPD15
P2-68 DSPD16
P2-66 DSPD17
P2-64 DSPD18
P2-62 DSPD19
P2-60 DSPD20
P2-58 DSPD21
P2-56 DSPD22
P2-54 DSPD23
P2-47 DSP_DAC2
+15V
-15V
+5V_SYS
-5V
C144 0.1uF
C141 1200pF 100V
C142 330pF 100V
C145 0.1uF
C163 0.1uF
C143 10uF
C164 0.1uF
C162 10uF
R124 1.96K 1%
R121 17.8K 1%
R125 2.26K 1%
R123 12.4K 1%
R145 10 5%
R144 10 5%
AD712
U39A
C139 2400p 500V
PHASE AD
8 POLE LOWPASS FI
SIN GEN. MDAC
P2-49 DSP_WR
P2-50 DSP_LDAC
P2-48 DSP_DAC3
U46
AD7840
TP27
C136 0.1uF
C133 1200pF 100V
C137 330pF 100V
C138 0.1uF
C160 0.1uF
C159 10uF
C161 0.1uF
C134 10uF
R119 1.96K 1%
R117 17.8K 1%
R120 2.26K 1%
R143 10 5%
R142 10 5%
AD712
U38A
C132 2400p 500V
R118 14.7K
IN

ZONE	LTR	DESCRIPTION	DATE	APPROVED
	F	REVISED PER ECN 33743	9/19/95	T.D.
	G	REVISED PER ECN 35358 (PCB MFGD TO REV F SCH)	2/17/98	T.D.
	H	REVISED PER ECN 35742	6/16/98	D.L.

REVISIONS

ZONE	LTR	DESCRIPTION	DATE	APPROVED
	B	REVISED PER ECN# 33131	3/10/94	T.D.
	C	REVISED PER PINK BOOK NOTES	6/07/94	T.D.
	D	REVISED PER ECR 33247	1/3/95	T.D.
	E	REVISED PER ECN 33440	5/31/95	T.D.

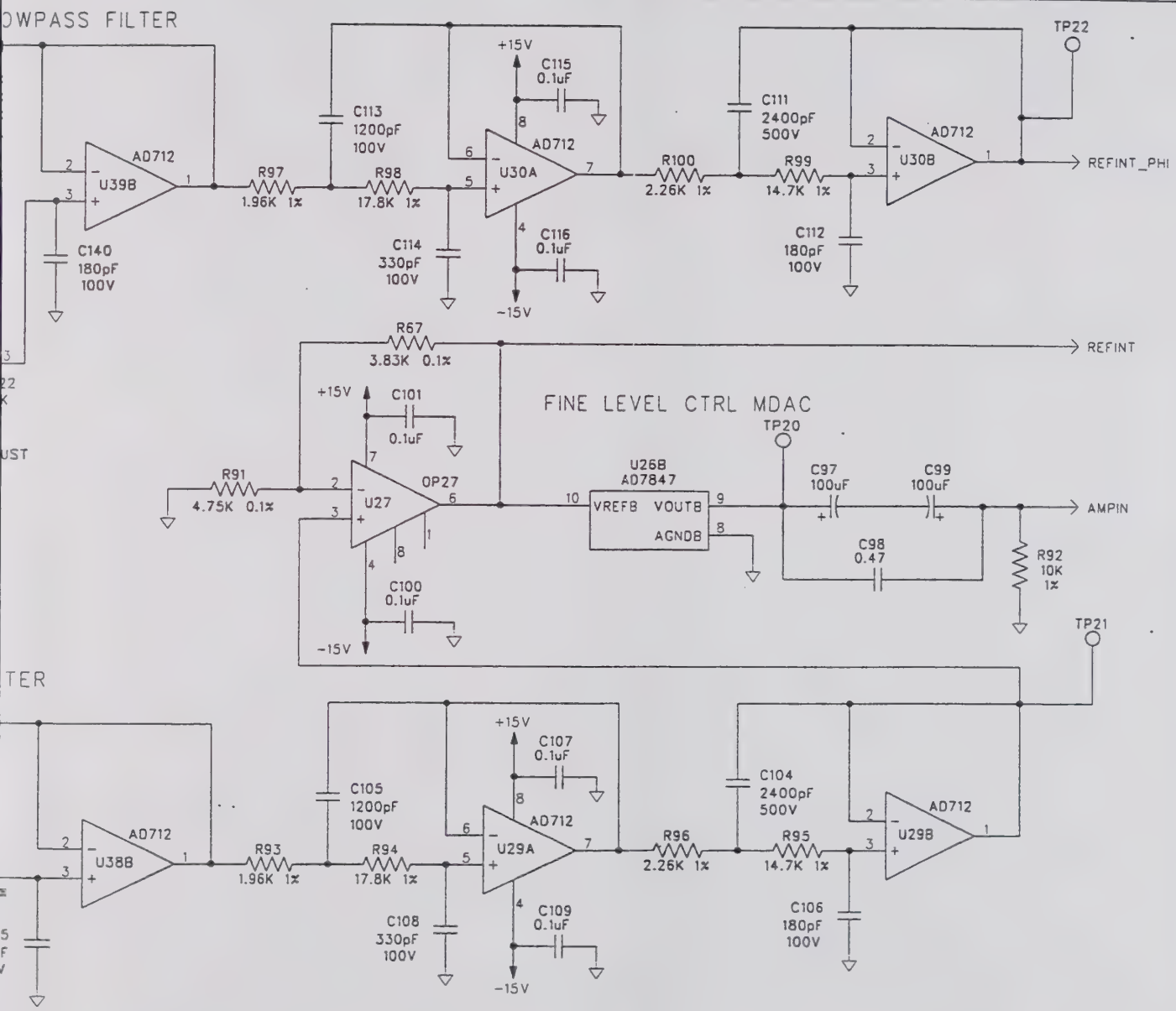

NORTH ATLANTIC INSTRUMENTS INC.

SCHEMATIC
MODEL 5300 ANALOG BD

NEXT ASSY	USED ON	SIZE		SHEET	REV
784008	5300	B	770006	1 OF 10	H

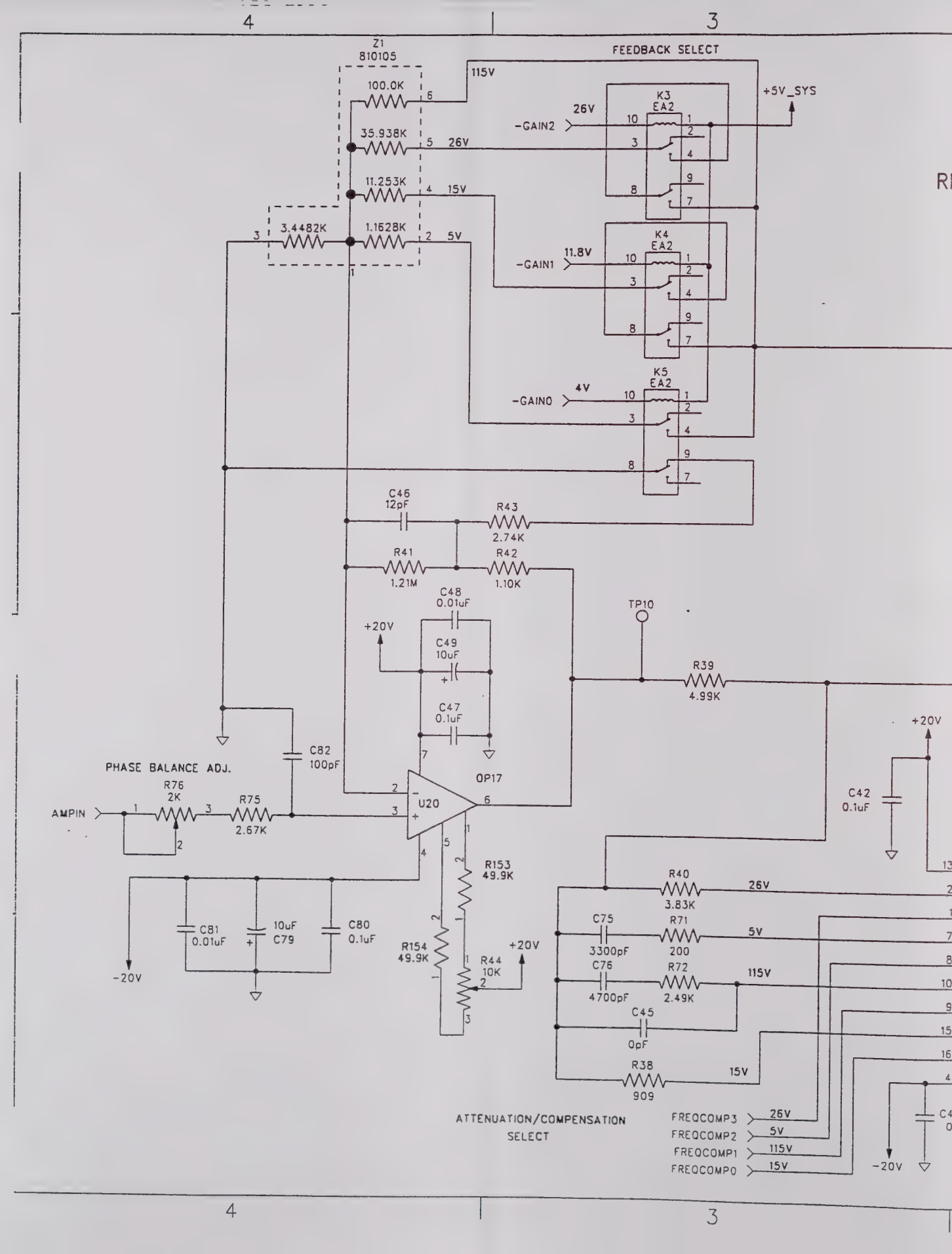
4
3
Z1
810105
100.0K
35.938K
11.253K
3.4482K
1.1628K
115V
26V
15V
5V
FEEDBACK SELECT
+5V_SYS
-GAIN2
-GAIN1
-GAIN0
11.8V
4V
K3
EA2
K4
EA2
K5
EA2
C46
12pF
R43
2.74K
R41
1.21M
R42
1.10K
C48
0.01uF
C49
10uF
C47
0.1uF
+20V
TP10
R39
4.99K
C82
100pF
PHASE BALANCE ADJ.
R76
2K
R75
2.67K
AMPIN
U20
OP17
R153
49.9K
R154
49.9K
R44
10K
C81
0.01uF
10uF
C79
C80
0.1uF
-20V
+20V
C42
0.1uF
R40
3.83K
C75
3300pF
R71
200
C76
4700pF
R72
2.49K
C45
0pF
R38
909
ATTENUATION/COMPENSATION
SELECT
FREQCOMP3
FREQCOMP2
FREQCOMP1
FREQCOMP0
26V
5V
115V
15V
-20V

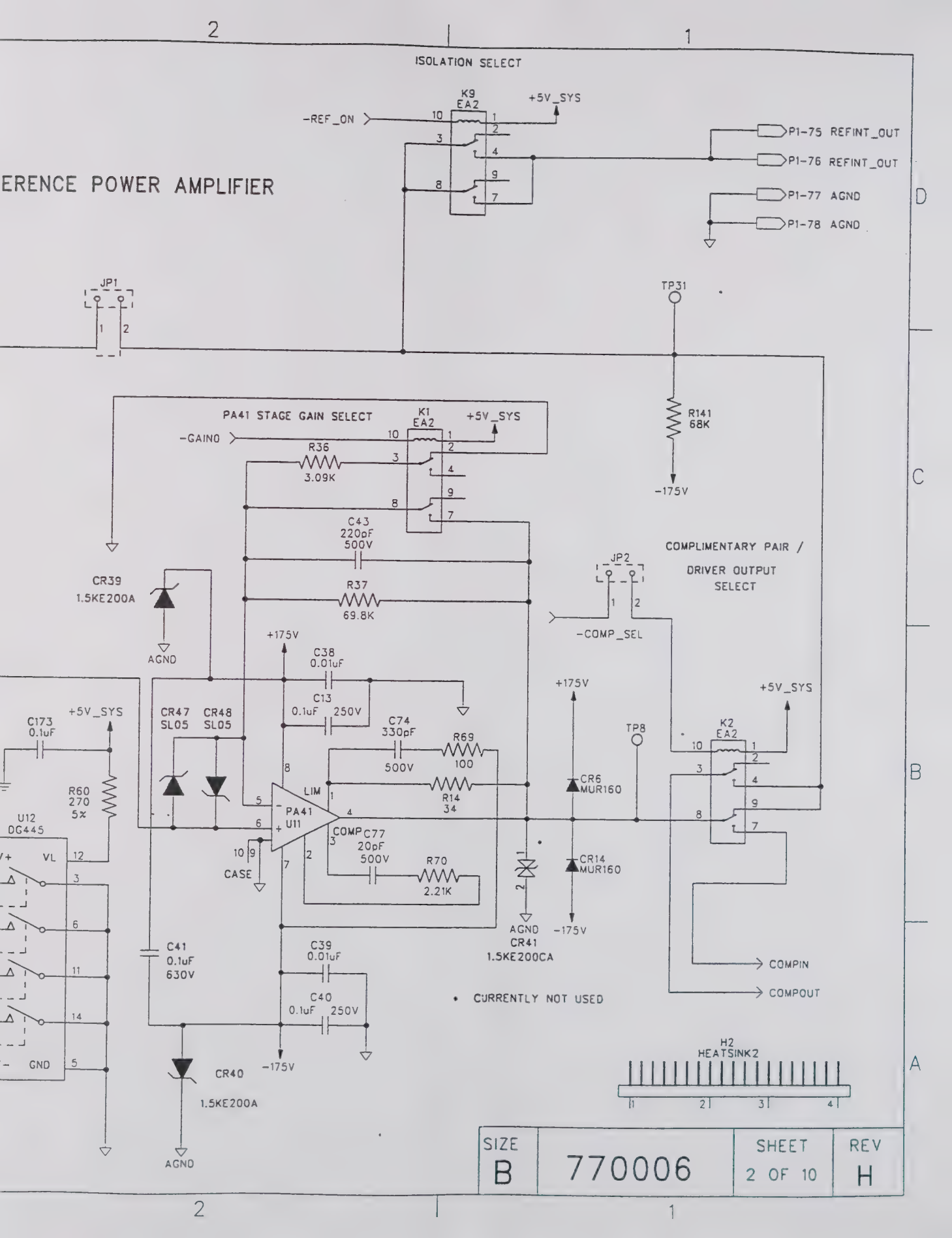
ISOLATION SELECT
K9
EA2
+5V_SYS
-REF_ON
P1-75 REFINT_OUT
P1-76 REFINT_OUT
P1-77 AGND
P1-78 AGND
ERENCE POWER AMPLIFIER
JP1
TP31
R141
68K
-175V
PA41 STAGE GAIN SELECT
K1
EA2
+5V_SYS
-GAIN0
R36
3.09K
C43
220pF
500V
R37
69.8K
COMPLIMENTARY PAIR /
DRIVER OUTPUT
SELECT
JP2
-COMP_SEL
CR39
1.5KE200A
AGND
+175V
C38
0.01uF
C13
0.1uF
250V
C173
0.1uF
+5V_SYS
CR47
SL05
CR48
SL05
C74
330pF
500V
R69
100
R14
34
LIM
PA41
U11
COMP
C77
20pF
500V
R70
2.21K
CASE
R60
270
5%
U12
DG445
VL
GND
C41
0.1uF
630V
C39
0.01uF
C40
0.1uF
250V
CR40
1.5KE200A
-175V
AGND
+175V
CR6
MUR160
CR14
MUR160
TP8
+5V_SYS
K2
EA2
AGND
CR41
1.5KE200CA
-175V
COMPIN
COMPOUT
• CURRENTLY NOT USED
H2
HEATSINK2
SIZE
B
770006
SHEET
2 OF 10
REV
H

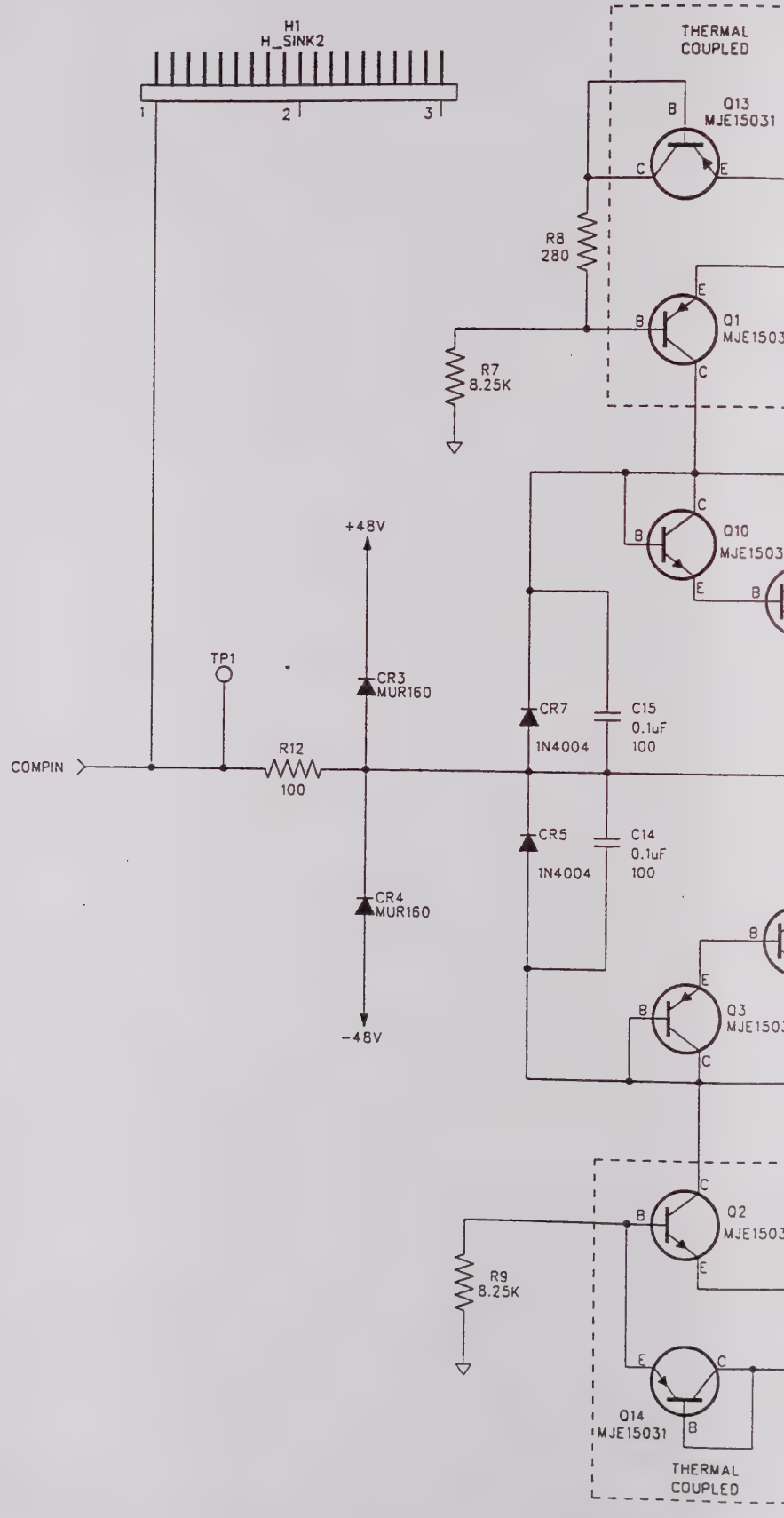
H1
H_SINK2
1
2
3
THERMAL
COUPLED
Q13
MJE15031
B
C
E
R8
280
Q1
MJE1503
R7
8.25K
Q10
MJE1503
+48V
TP1
CR3
MUR160
CR7
1N4004
C15
0.1uF
100
COMPIN
R12
100
CR5
1N4004
C14
0.1uF
100
CR4
MUR160
-48V
Q3
MJE1503
Q2
MJE1503
R9
8.25K
Q14
MJE15031
THERMAL
COUPLED

CURRENT BOOST COMPLEMENTARY PAIR

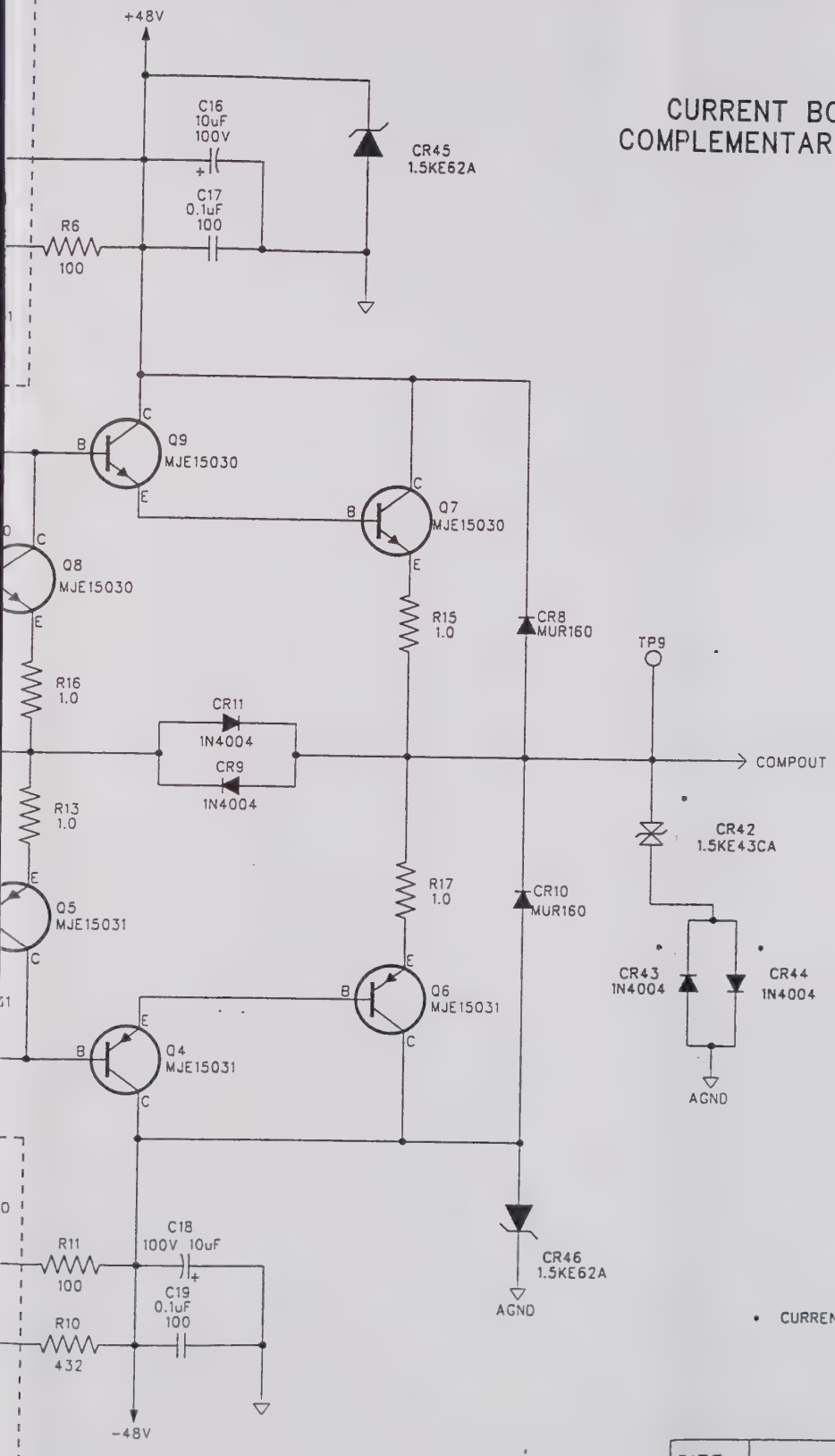

• CURRENTLY NOT USED

SIZE		SHEET	REV
B	770006	3 OF 10	H

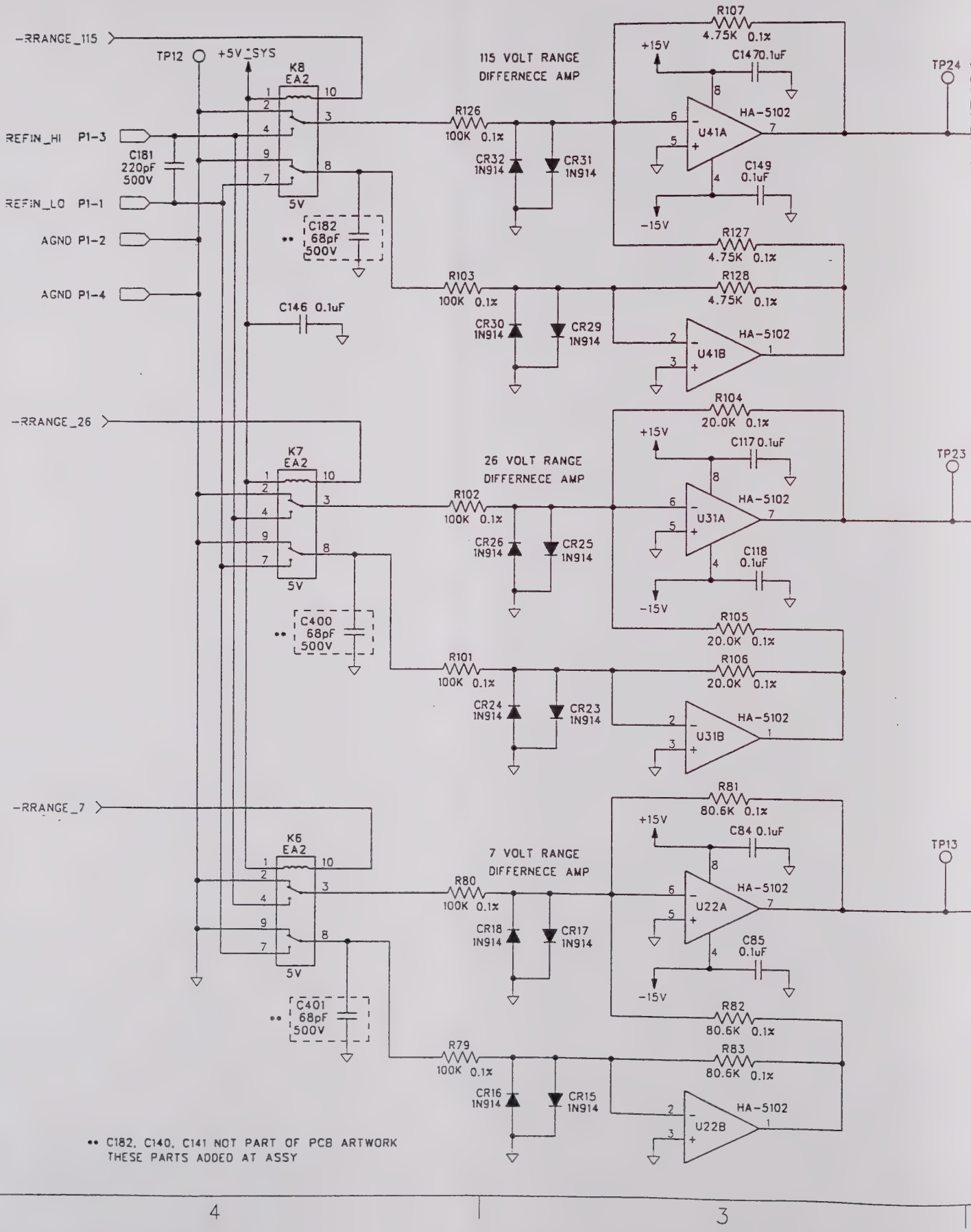
-RRANGE_115
TP12
+5V_SYS
K8
EA2
REFIN_HI P1-3
REFIN_LO P1-1
AGND P1-2
AGND P1-4
C181
220pF
500V
5V
** C182
68pF
500V
C146 0.1uF
115 VOLT RANGE
DIFFERNECE AMP
R126
100K 0.1%
CR32
1N914
CR31
1N914
R107
4.75K 0.1%
+15V
C147 0.1uF
HA-5102
U41A
C149
0.1uF
-15V
TP24
R127
4.75K 0.1%
R103
100K 0.1%
CR30
1N914
CR29
1N914
R128
4.75K 0.1%
HA-5102
U41B
-RRANGE_26
K7
EA2
26 VOLT RANGE
DIFFERNECE AMP
R102
100K 0.1%
CR26
1N914
CR25
1N914
R104
20.0K 0.1%
+15V
C117 0.1uF
HA-5102
U31A
C118
0.1uF
-15V
TP23
R105
20.0K 0.1%
** C400
68pF
500V
R101
100K 0.1%
CR24
1N914
CR23
1N914
R106
20.0K 0.1%
HA-5102
U31B
-RRANGE_7
K6
EA2
7 VOLT RANGE
DIFFERNECE AMP
R80
100K 0.1%
CR18
1N914
CR17
1N914
R81
80.6K 0.1%
+15V
C84 0.1uF
HA-5102
U22A
C85
0.1uF
-15V
TP13
R82
80.6K 0.1%
** C401
68pF
500V
R79
100K 0.1%
CR16
1N914
CR15
1N914
R83
80.6K 0.1%
HA-5102
U22B
** C182, C140, C141 NOT PART OF PCB ARTWORK
THESE PARTS ADDED AT ASSY

REFERENCE SELECTION AND EXTERNAL REFERENCE RANGE ATTENUATION

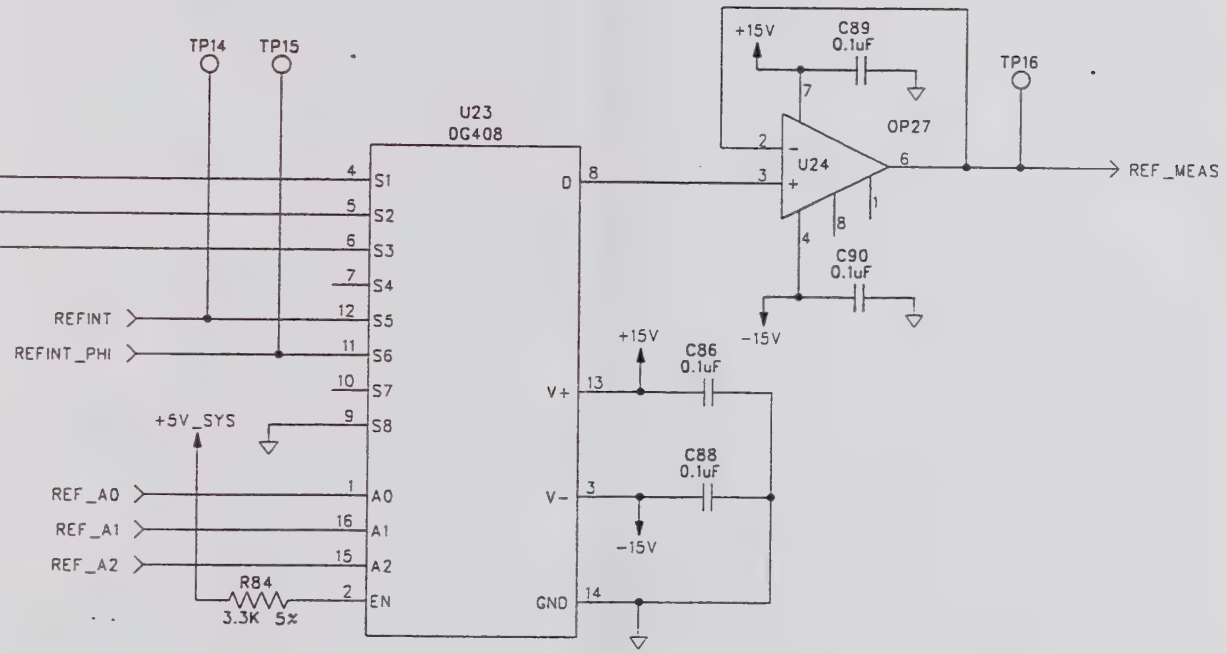

SIZE		SHEET	REV
B	770006	4 OF 10	H

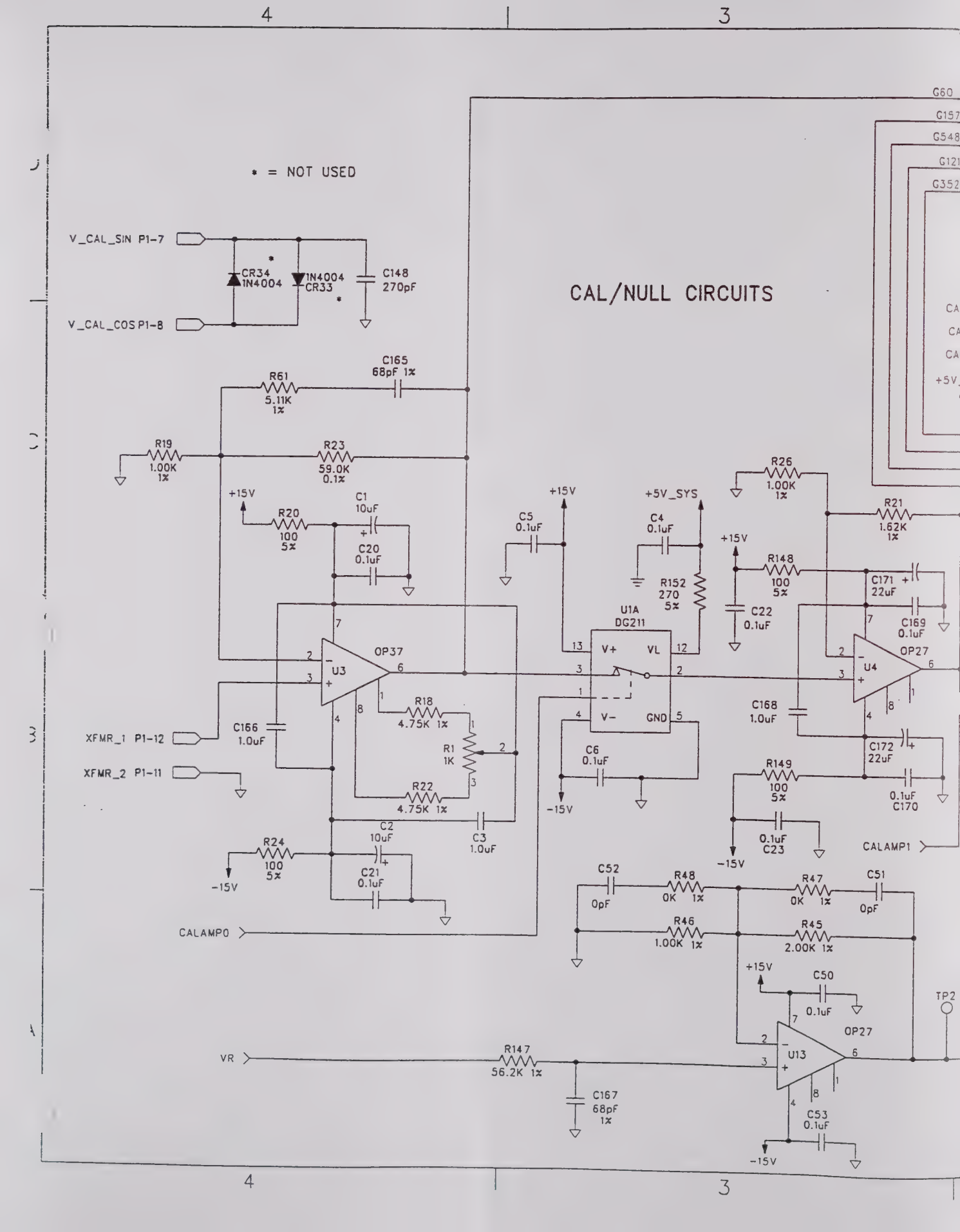
* = NOT USED
CAL/NULL CIRCUITS
V_CAL_SIN P1-7
V_CAL_COS P1-8
CR34 1N4004
1N4004 CR33
C148 270pF
R61 5.11K 1%
C165 68pF 1%
R19 1.00K 1%
R23 59.0K 0.1%
+15V
R20 100 5%
C1 10uF
C20 0.1uF
C5 0.1uF
C4 0.1uF
+5V_SYS
R152 270 5%
C22 0.1uF
R26 1.00K 1%
R21 1.62K 1%
R148 100 5%
C171 22uF
C169 0.1uF
U1A DG211
V+ VL V- GND
U3 OP37
U4 OP27
R18 4.75K 1%
R1 1K
R22 4.75K 1%
C166 1.0uF
C168 1.0uF
C172 22uF
C6 0.1uF
-15V
R149 100 5%
0.1uF C170
0.1uF C23
XFMR_1 P1-12
XFMR_2 P1-11
C2 10uF
C3 1.0uF
R24 100 5%
C21 0.1uF
CALAMP1
CALAMP0
C52 0pF
R48 0K 1%
R47 0K 1%
C51 0pF
R46 1.00K 1%
R45 2.00K 1%
C50 0.1uF
TP2
U13 OP27
VR
R147 56.2K 1%
C167 68pF 1%
C53 0.1uF

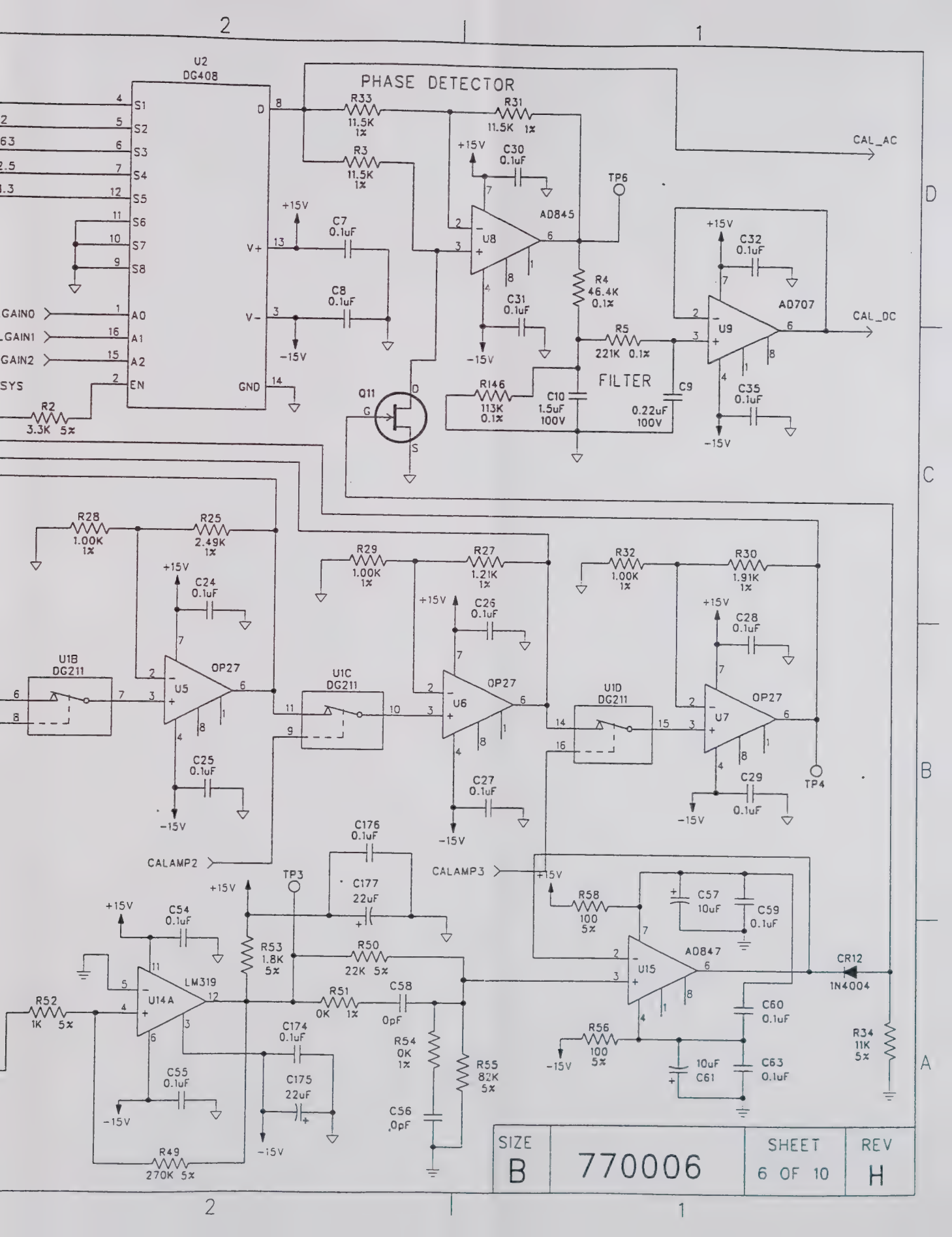
PHASE DETECTOR
U2
DG408
S1
S2
S3
S4
S5
S6
S7
S8
D
V+
V-
GND
EN
A0
A1
A2
GAIN0
GAIN1
GAIN2
SYS
R2
3.3K 5%
R33
11.5K 1%
R31
11.5K 1%
R3
11.5K 1%
C30
0.1uF
TP6
CAL_AC
C7
0.1uF
C8
0.1uF
U8
AD845
C31
0.1uF
R4
46.4K 0.1%
R5
221K 0.1%
C32
0.1uF
U9
AD707
CAL_DC
C35
0.1uF
Q11
R146
113K 0.1%
C10
1.5uF 100V
FILTER
C9
0.22uF 100V
R28
1.00K 1%
R25
2.49K 1%
C24
0.1uF
U1B
DG211
U5
OP27
C25
0.1uF
R29
1.00K 1%
R27
1.21K 1%
C26
0.1uF
U1C
DG211
U6
OP27
C27
0.1uF
R32
1.00K 1%
R30
1.91K 1%
C28
0.1uF
U1D
DG211
U7
OP27
C29
0.1uF
TP4
CALAMP2
CALAMP3
C176
0.1uF
C177
22uF
TP3
C54
0.1uF
R53
1.8K 5%
R50
22K 5%
U14A
LM319
R52
1K 5%
R51
0K 1%
C58
0pF
C174
0.1uF
C175
22uF
C55
0.1uF
R54
0K 1%
R55
82K 5%
C56
0pF
R49
270K 5%
R58
100 5%
C57
10uF
C59
0.1uF
U15
AD847
CR12
1N4004
C60
0.1uF
R56
100 5%
C61
10uF
C63
0.1uF
R34
11K 5%
+15V
-15V
SIZE
B
770006
SHEET
6 OF 10
REV
H

MEASUREMENT CIR

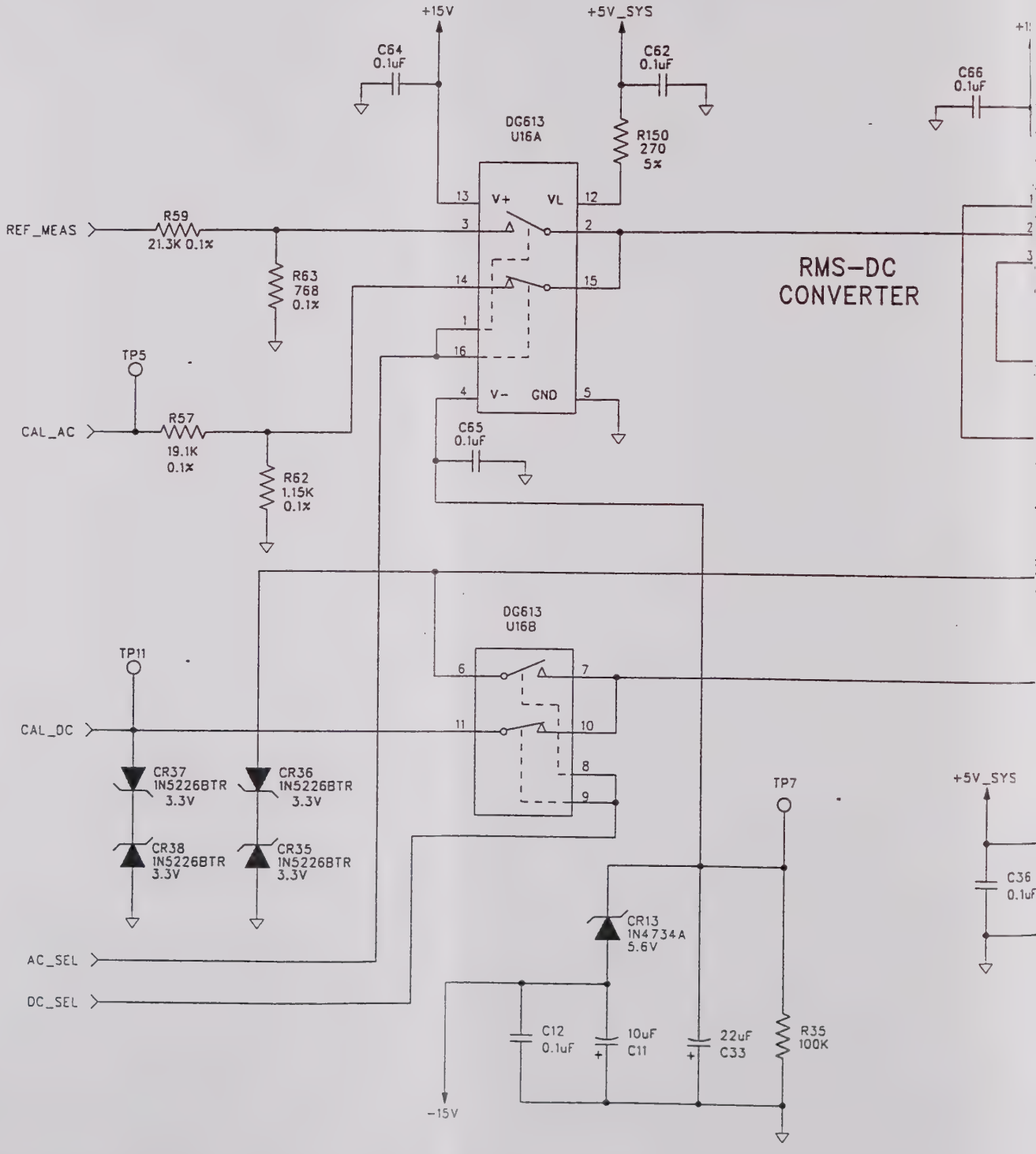

CUITS

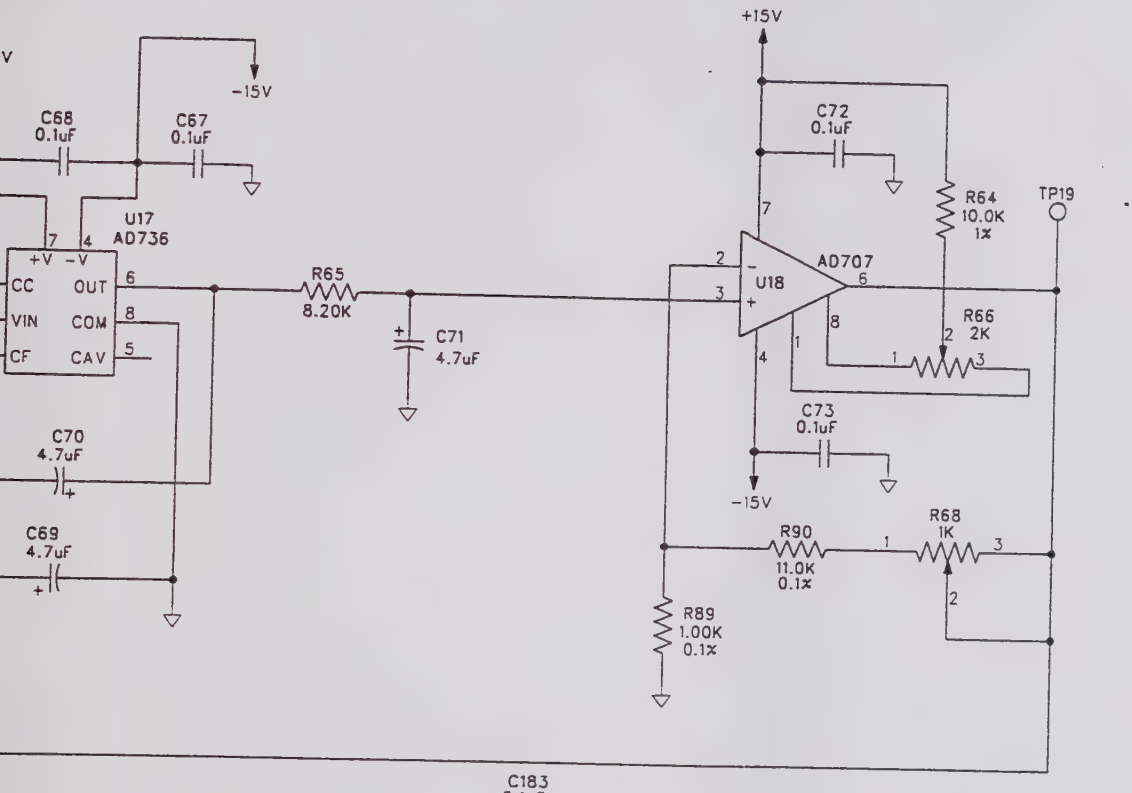

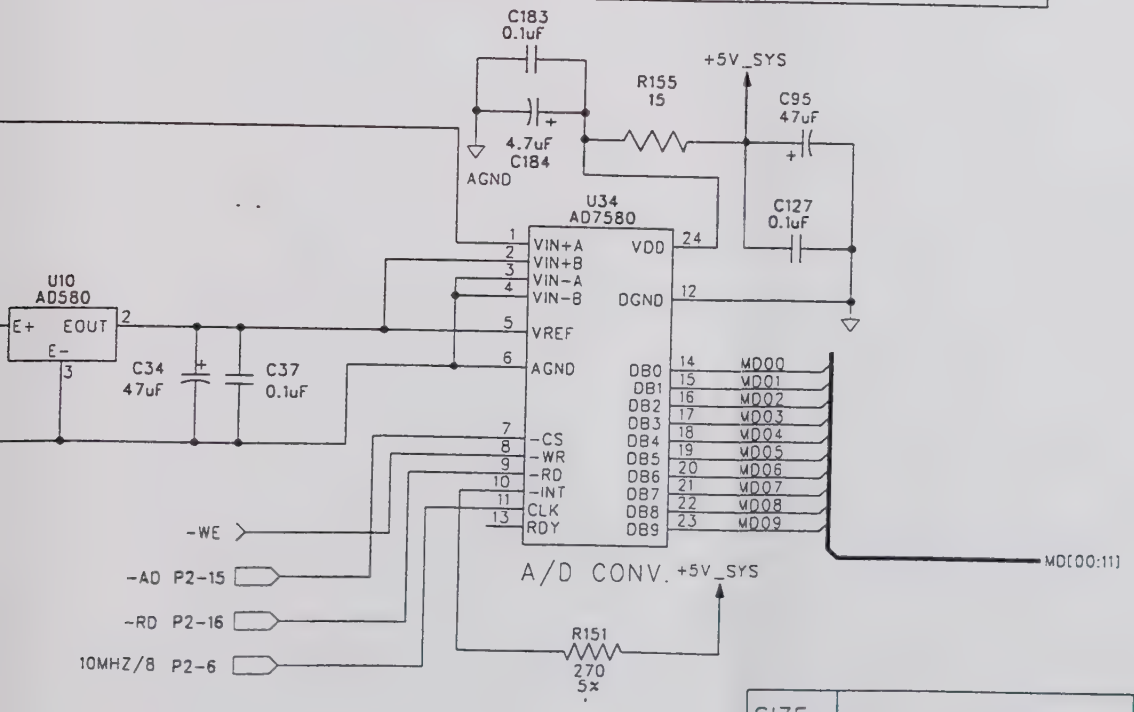

SIZE		SHEET	REV
B	770006	7 OF 10	H

4 3

FREQUENCY
SQUARING (HARD

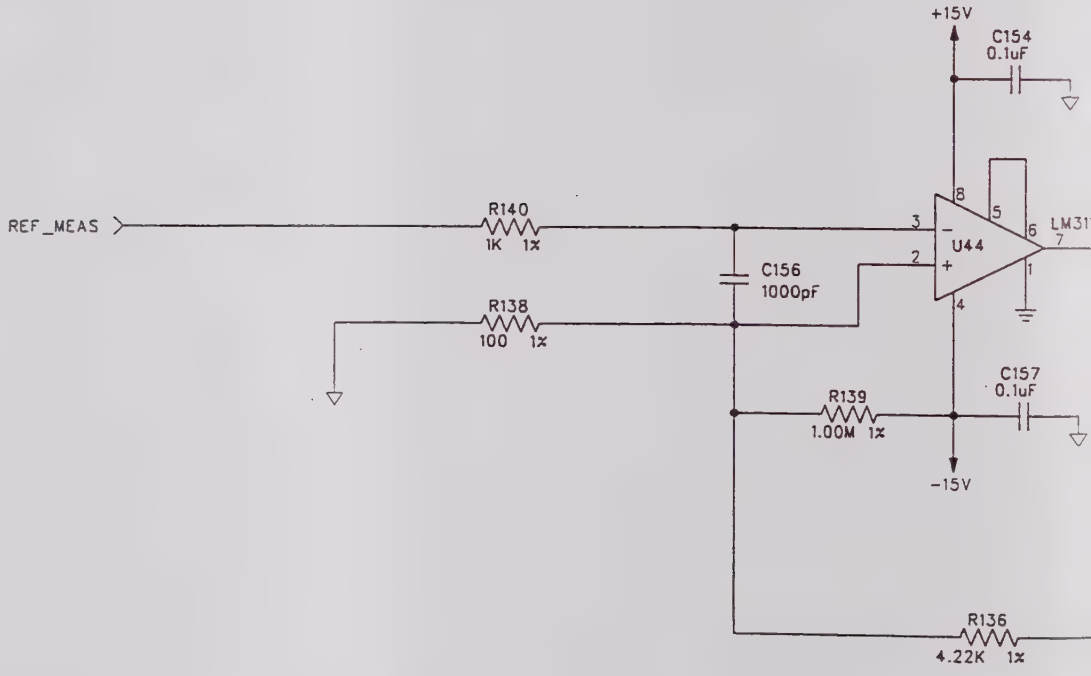

4 3

MEASUREMENT
LIMIT) CIRCUIT

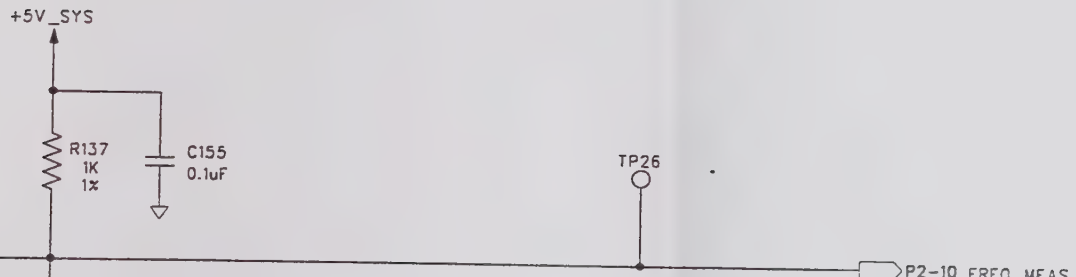

SIZE		SHEET	REV
B	770006	8 OF 10	H

4 3

20 VOLT PO

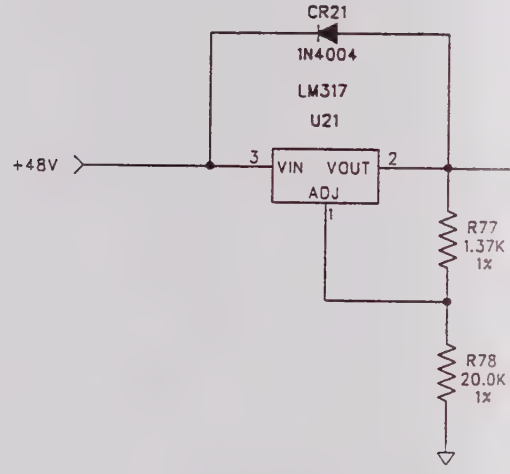

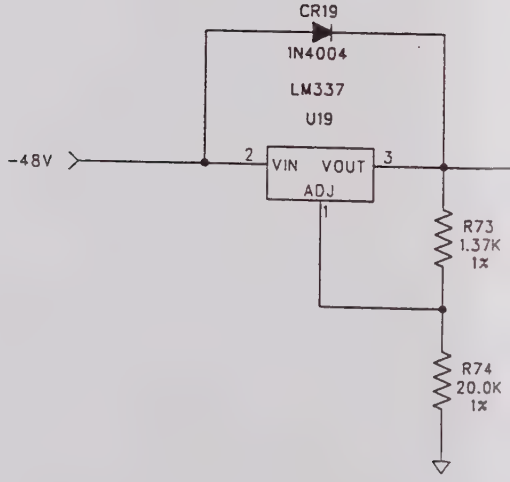

4 3

VER SUPPLIES

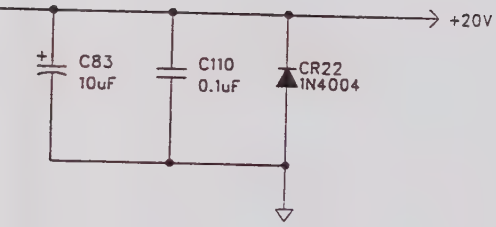

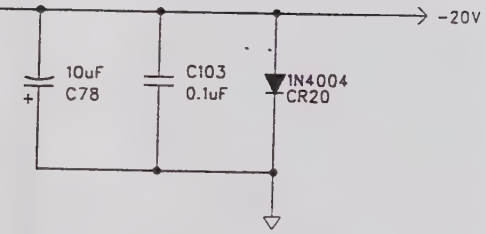

INTERFACE CIRCUITS

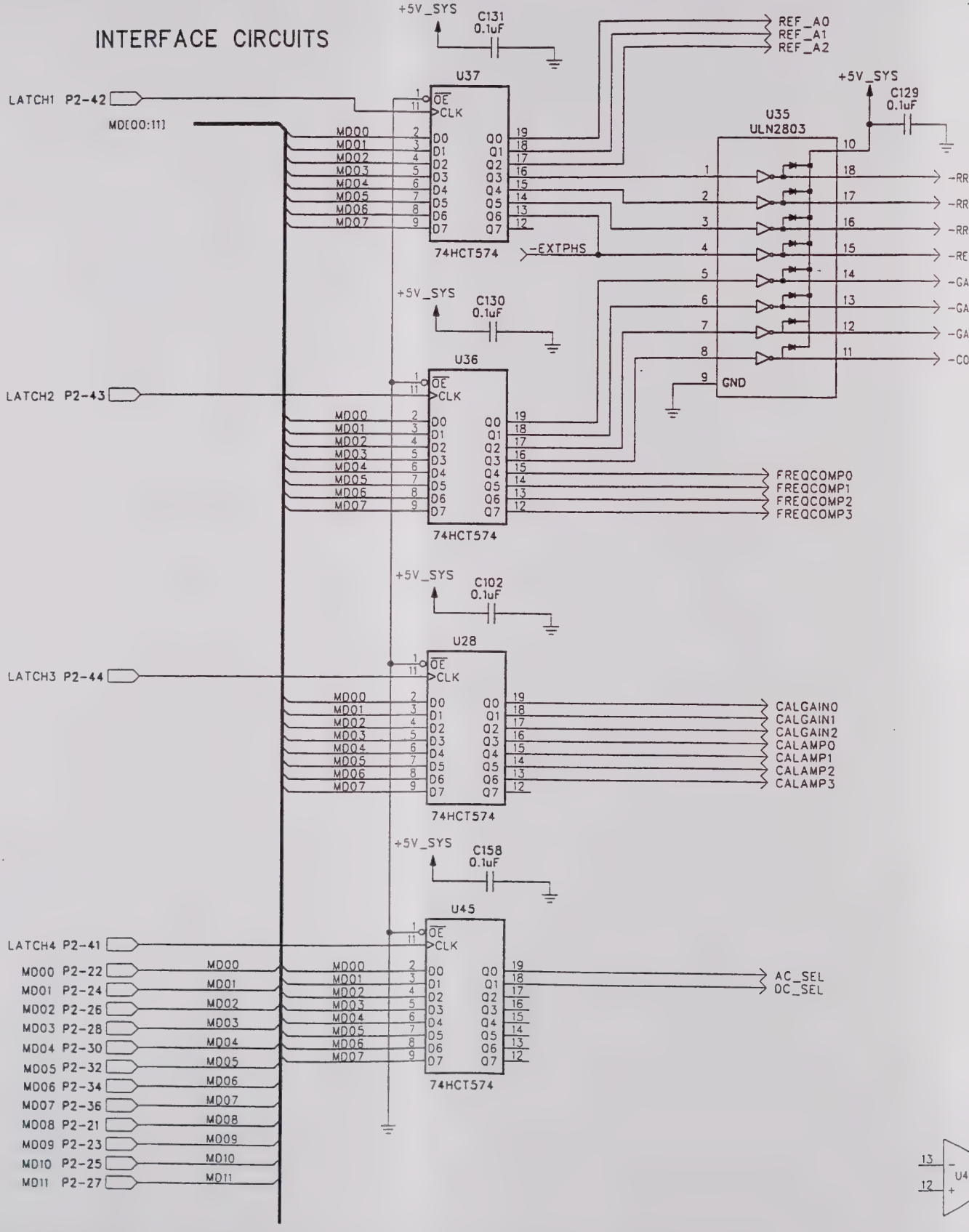

ANGE_7
ANGE_26
ANGE_115
_ON
IN0
IN1
N2
MP_SEL

POWER SUPPLY INPUTS

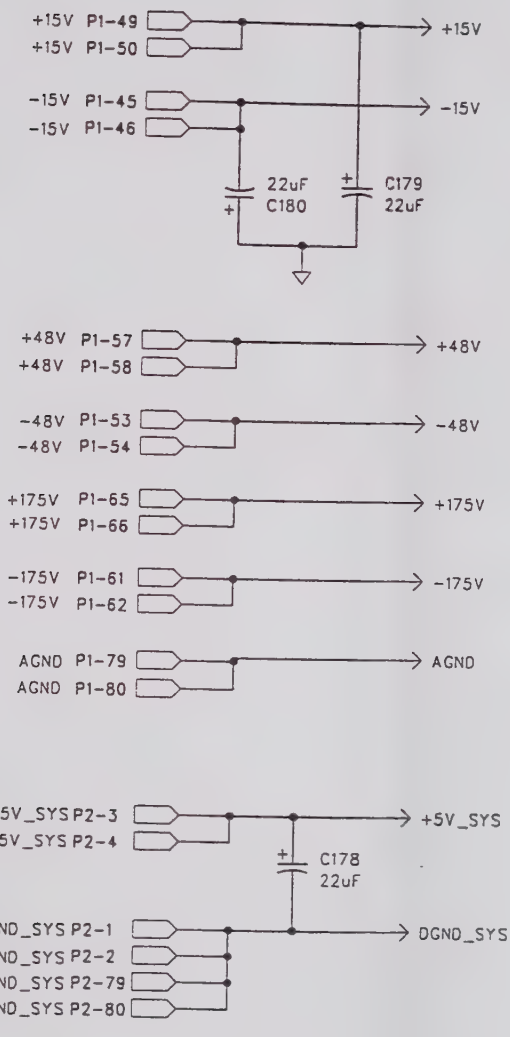

MOUNTING HOLES

SPARE GATES

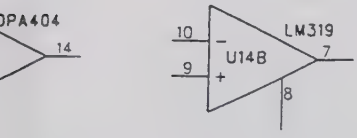

SIZE		SHEET	REV
B	770006	10 OF 10	H

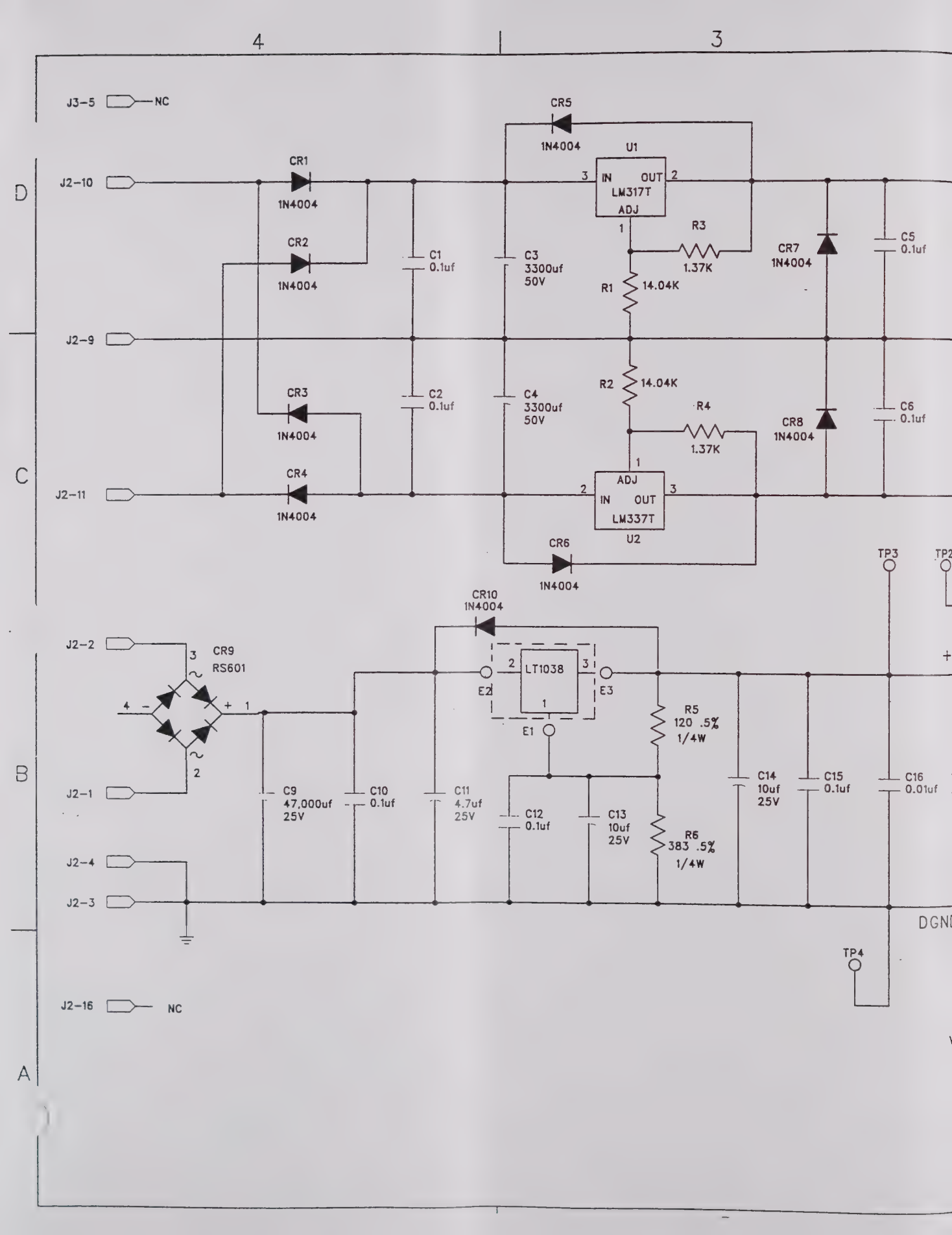
4
3
D
C
B
A
J3-5
NC
J2-10
J2-9
J2-11
J2-2
J2-1
J2-4
J2-3
J2-16
NC
CR1
1N4004
CR2
1N4004
CR3
1N4004
CR4
1N4004
CR5
1N4004
CR6
1N4004
CR7
1N4004
CR8
1N4004
CR9
RS601
CR10
1N4004
U1
LM317T
ADJ
IN
OUT
U2
LM337T
ADJ
IN
OUT
LT1038
E1
E2
E3
C1
0.1uf
C2
0.1uf
C3
3300uf
50V
C4
3300uf
50V
C5
0.1uf
C6
0.1uf
C9
47,000uf
25V
C10
0.1uf
C11
4.7uf
25V
C12
0.1uf
C13
10uf
25V
C14
10uf
25V
C15
0.1uf
C16
0.01uf
R1
14.04K
R2
14.04K
R3
1.37K
R4
1.37K
R5
120 .5%
1/4W
R6
383 .5%
1/4W
TP3
TP2
TP4
DGND

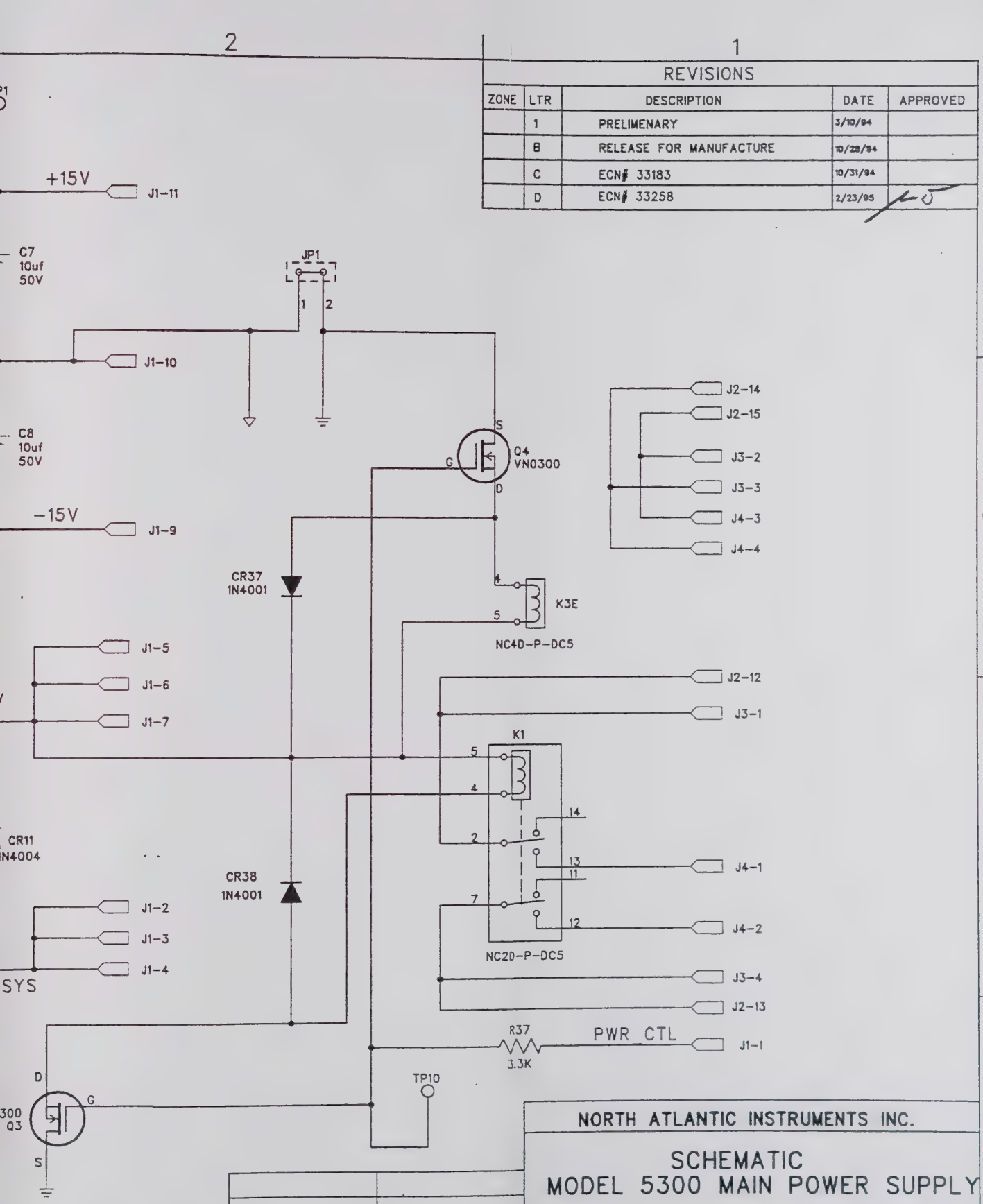
2
1
REVISIONS
ZONE | LTR | DESCRIPTION | DATE | APPROVED
1 | PRELIMENARY | 3/10/94
B | RELEASE FOR MANUFACTURE | 10/28/94
C | ECN# 33183 | 10/31/94
D | ECN# 33258 | 2/23/95
+15V
J1-11
C7
10uf
50V
JP1
1
2
J1-10
C8
10uf
50V
-15V
J1-9
Q4
VN0300
S
G
D
J2-14
J2-15
J3-2
J3-3
J4-3
J4-4
CR37
1N4001
K3E
4
5
NC4D-P-DC5
J1-5
J1-6
J1-7
J2-12
J3-1
K1
5
4
14
2
13
11
7
12
NC2D-P-DC5
J4-1
J4-2
J3-4
J2-13
CR11
N4004
CR38
1N4001
J1-2
J1-3
J1-4
SYS
R37
3.3K
PWR CTL
J1-1
TP10
D
G
S
300
Q3
NORTH ATLANTIC INSTRUMENTS INC.
SCHEMATIC
MODEL 5300 MAIN POWER SUPPLY
784003
NEXT ASSY
5300
USED ON
SIZE
B
770009
SHEET
1 OF 3
REV
D
A
B
C
D

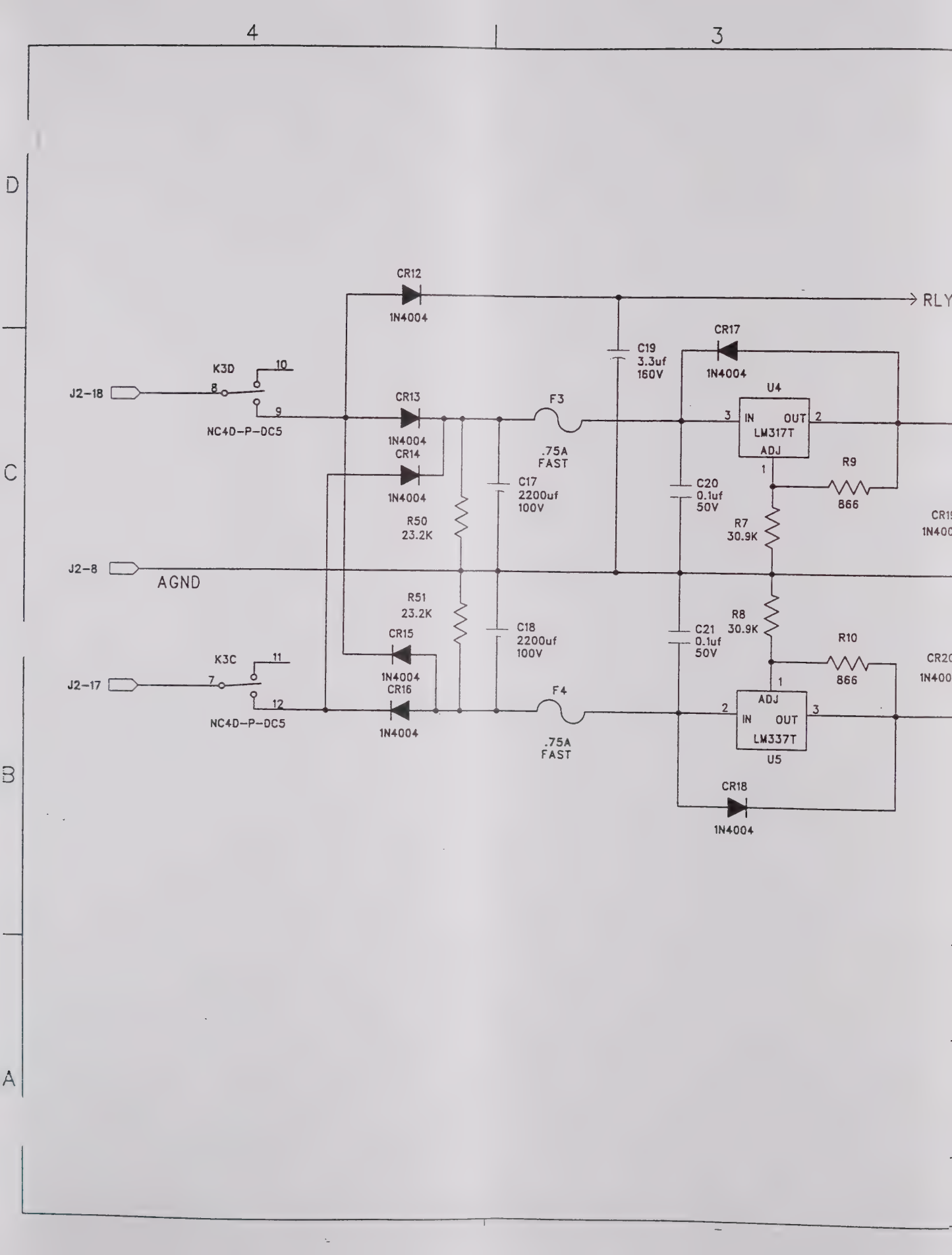
4
3
D
C
B
A
CR12
1N4004
RLY
C19
3.3uf
160V
CR17
1N4004
U4
K3D
10
J2-18
8
9
NC4D-P-DC5
CR13
1N4004
CR14
1N4004
F3
.75A
FAST
3
IN
OUT
2
LM317T
ADJ
1
R9
866
C17
2200uf
100V
C20
0.1uf
50V
R7
30.9K
R50
23.2K
J2-8
AGND
R51
23.2K
R8
30.9K
C18
2200uf
100V
C21
0.1uf
50V
R10
866
CR15
1N4004
CR16
1N4004
K3C
11
J2-17
7
12
NC4D-P-DC5
F4
.75A
FAST
ADJ
IN
OUT
LM337T
U5
CR18
1N4004

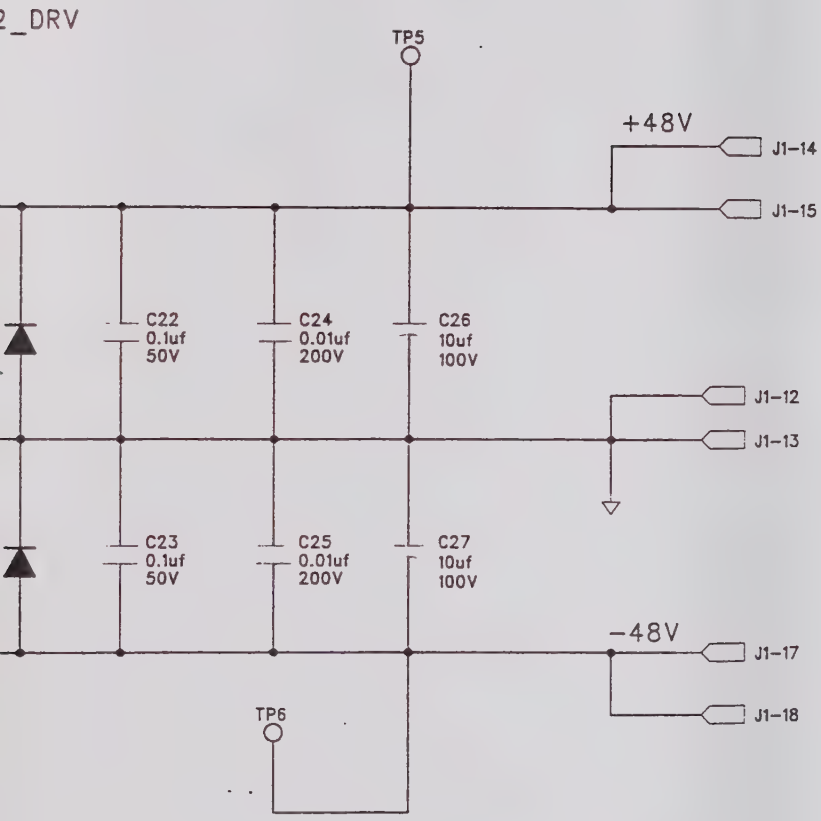
2_DRV
TP5
+48V
J1-14
J1-15
C22
0.1uf
50V
C24
0.01uf
200V
C26
10uf
100V
J1-12
J1-13
C23
0.1uf
50V
C25
0.01uf
200V
C27
10uf
100V
-48V
J1-17
J1-18
TP6

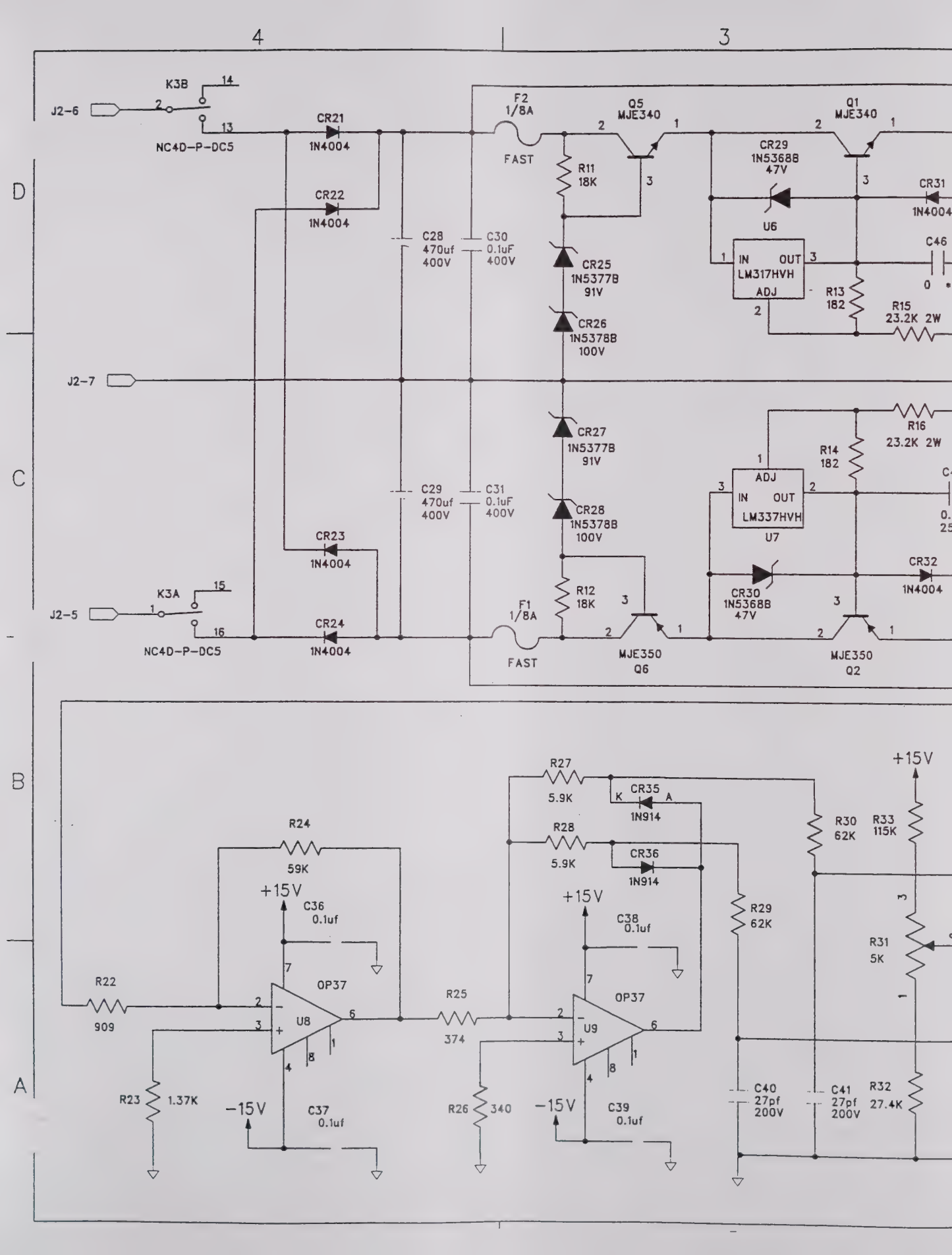
4
3
D
C
B
A
K3B
14
J2-6
2
13
NC4D-P-DC5
CR21
1N4004
CR22
1N4004
F2
1/8A
FAST
Q5
MJE340
R11
18K
Q1
MJE340
CR29
1N5368B
47V
U6
CR31
1N4004
C28
470uf
400V
C30
0.1uF
400V
CR25
1N5377B
91V
CR26
1N5378B
100V
IN
OUT
LM317HVH
ADJ
C46
R13
182
R15
23.2K 2W
J2-7
CR27
1N5377B
91V
R16
23.2K 2W
R14
182
ADJ
IN
OUT
LM337HVH
U7
C29
470uf
400V
C31
0.1uF
400V
CR28
1N5378B
100V
CR23
1N4004
CR32
1N4004
K3A
15
J2-5
1
16
NC4D-P-DC5
CR24
1N4004
R12
18K
F1
1/8A
FAST
MJE350
Q6
CR30
1N5368B
47V
MJE350
Q2
R24
59K
+15V
C36
0.1uf
R22
909
OP37
U8
R23
1.37K
-15V
C37
0.1uf
R27
5.9K
CR35
1N914
R28
5.9K
CR36
1N914
R25
374
+15V
C38
0.1uf
OP37
U9
R26
340
-15V
C39
0.1uf
R29
62K
R30
62K
R33
115K
+15V
R31
5K
C40
27pf
200V
C41
27pf
200V
R32
27.4K

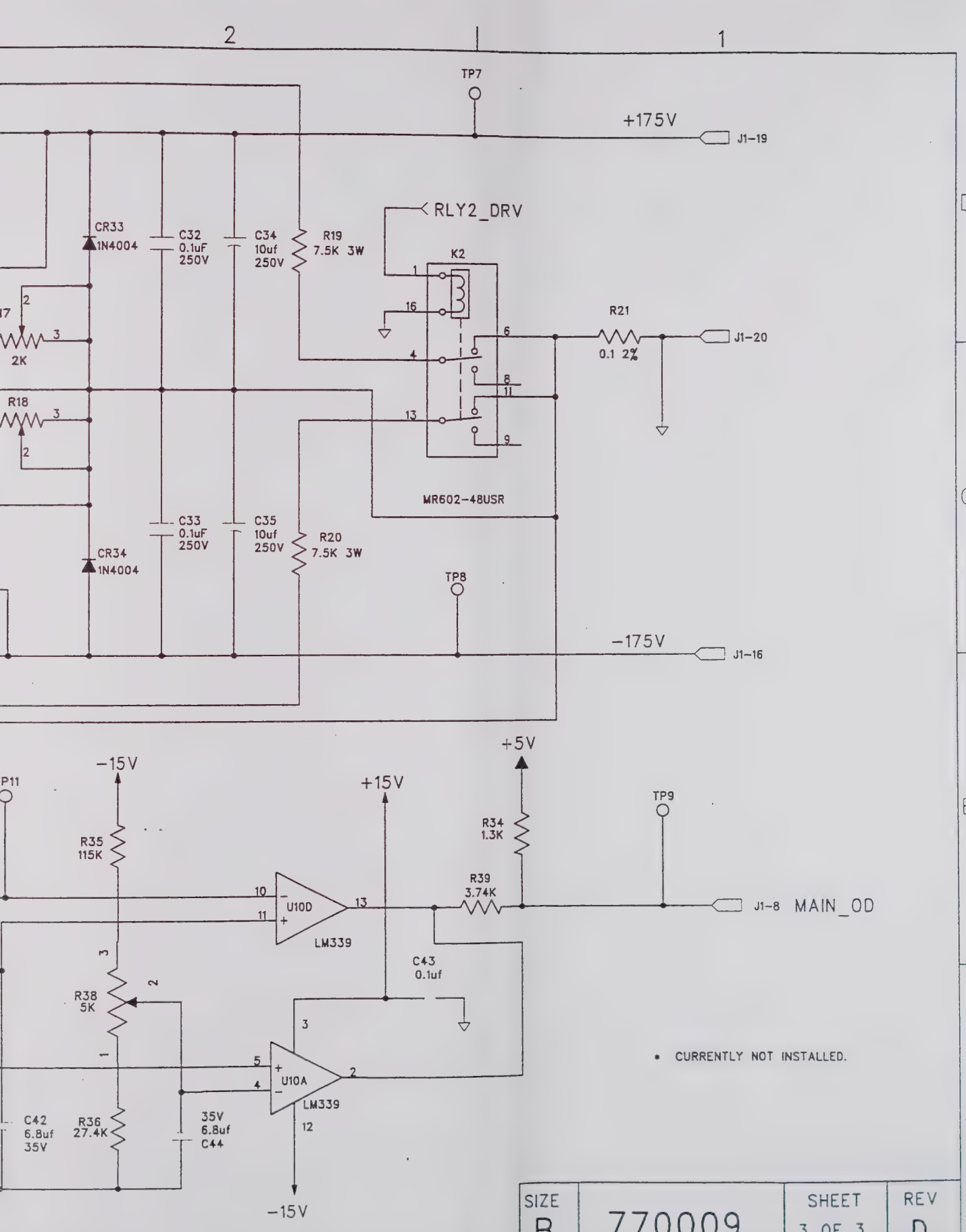
2
1
TP7
+175V
J1-19
RLY2_DRV
CR33
1N4004
C32
0.1uF
250V
C34
10uf
250V
R19
7.5K 3W
K2
R21
0.1 2%
J1-20
2K
R18
MR602-48USR
C33
0.1uF
250V
C35
10uf
250V
R20
7.5K 3W
CR34
1N4004
TP8
-175V
J1-16
+5V
-15V
+15V
TP9
R34
1.3K
R35
115K
R39
3.74K
U10D
LM339
J1-8
MAIN_OD
C43
0.1uf
R38
5K
U10A
LM339
C42
6.8uf
35V
R36
27.4K
35V
6.8uf
C44
-15V
• CURRENTLY NOT INSTALLED.
SIZE
B
770009
SHEET
3 OF 3
REV
D

MAIN DIS

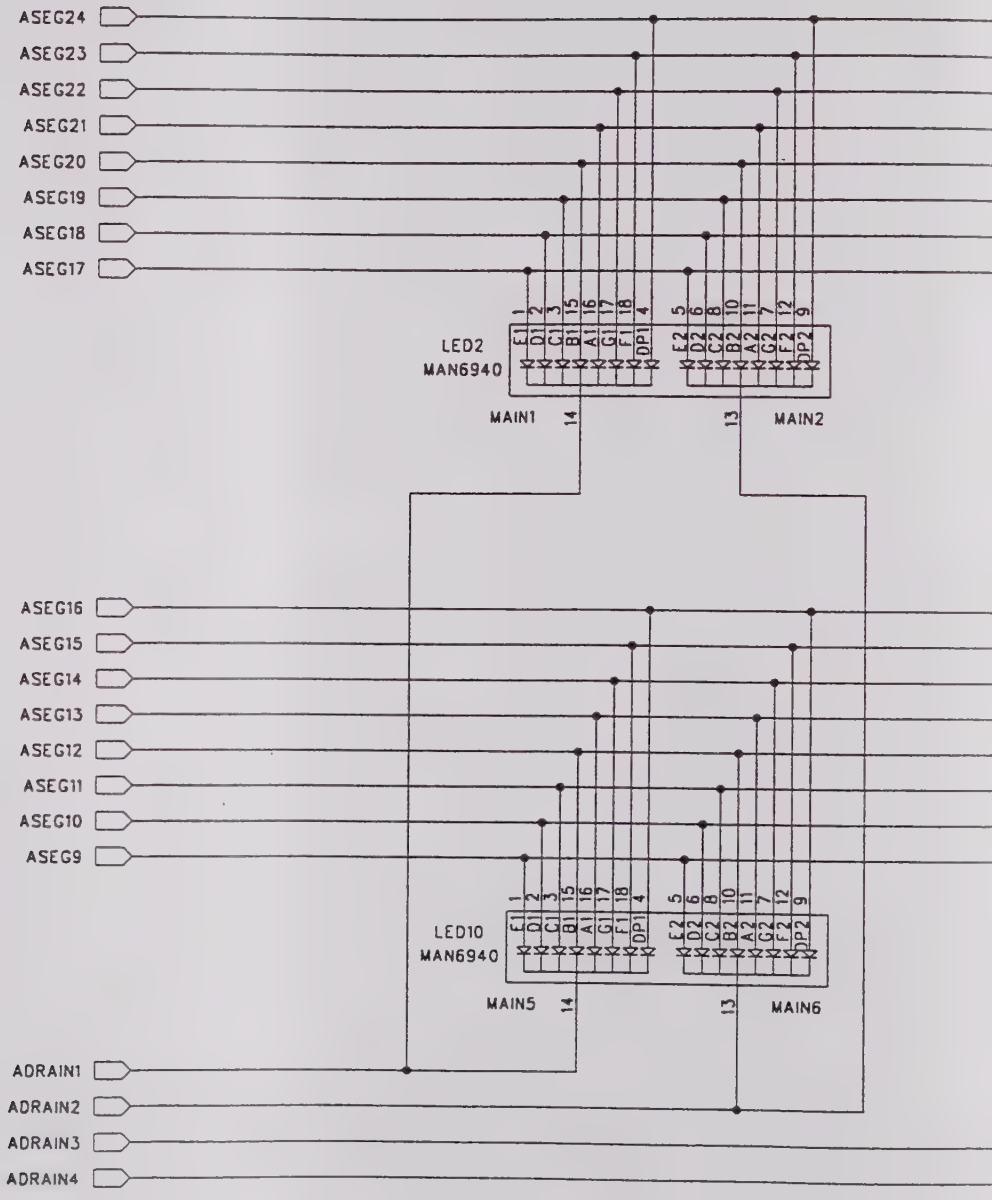
ASEG24
ASEG23
ASEG22
ASEG21
ASEG20
ASEG19
ASEG18
ASEG17
LED2
MAN6940
MAIN1
MAIN2
ASEG16
ASEG15
ASEG14
ASEG13
ASEG12
ASEG11
ASEG10
ASEG9
LED10
MAN6940
MAIN5
MAIN6
ADRAIN1
ADRAIN2
ADRAIN3
ADRAIN4

REVISIONS				
ZONE	LTR	DESCRIPTION	DATE	APPROVED
	B	RELEASE FOR MFG.	11-23-94	

LAY

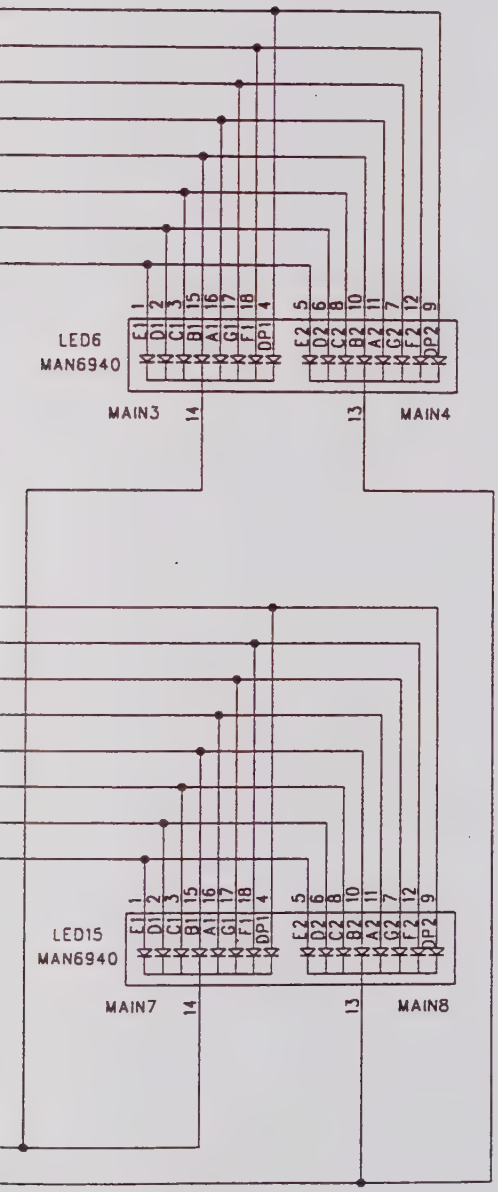

NOTH ATLANTIC INSTRUMENTS INC.

SCHEMATIC DIAGRAM
5300 DISPLAY/KEYBOARD

SIZE		SHEET	REV
B	770000	1 OF 6	B

VOLTAG

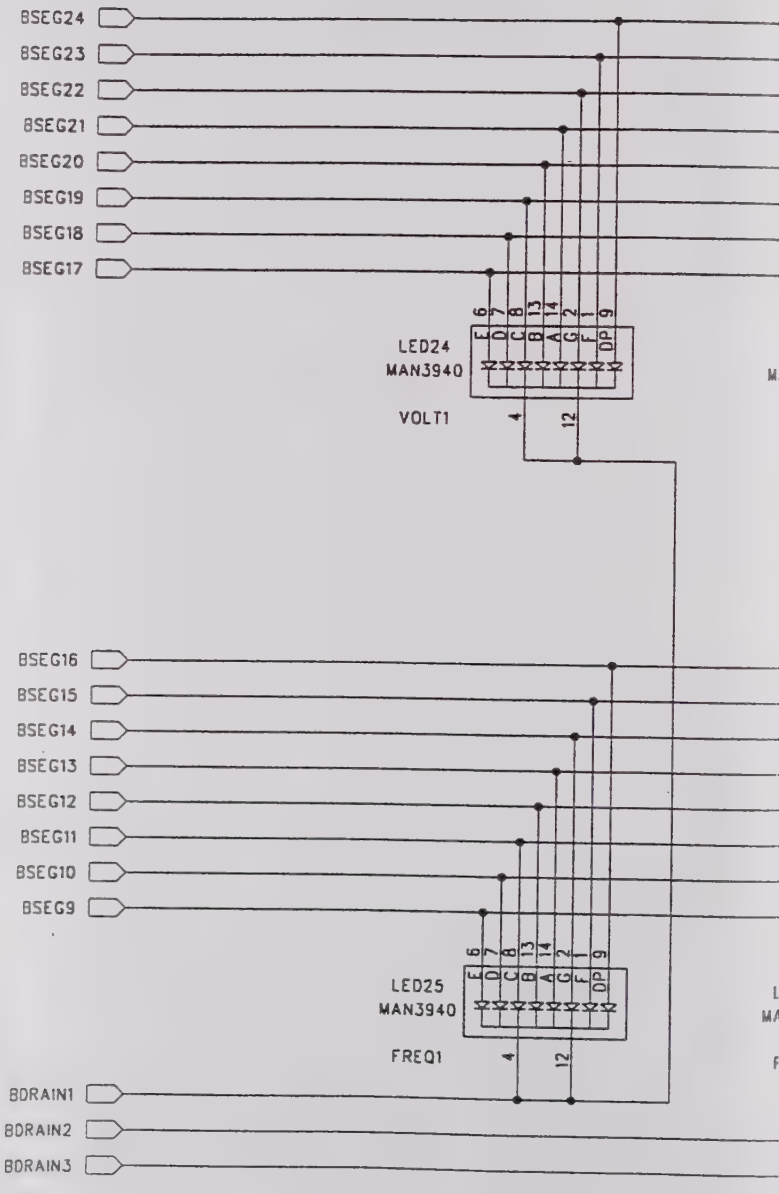

FREQUEN

E DISPLAY

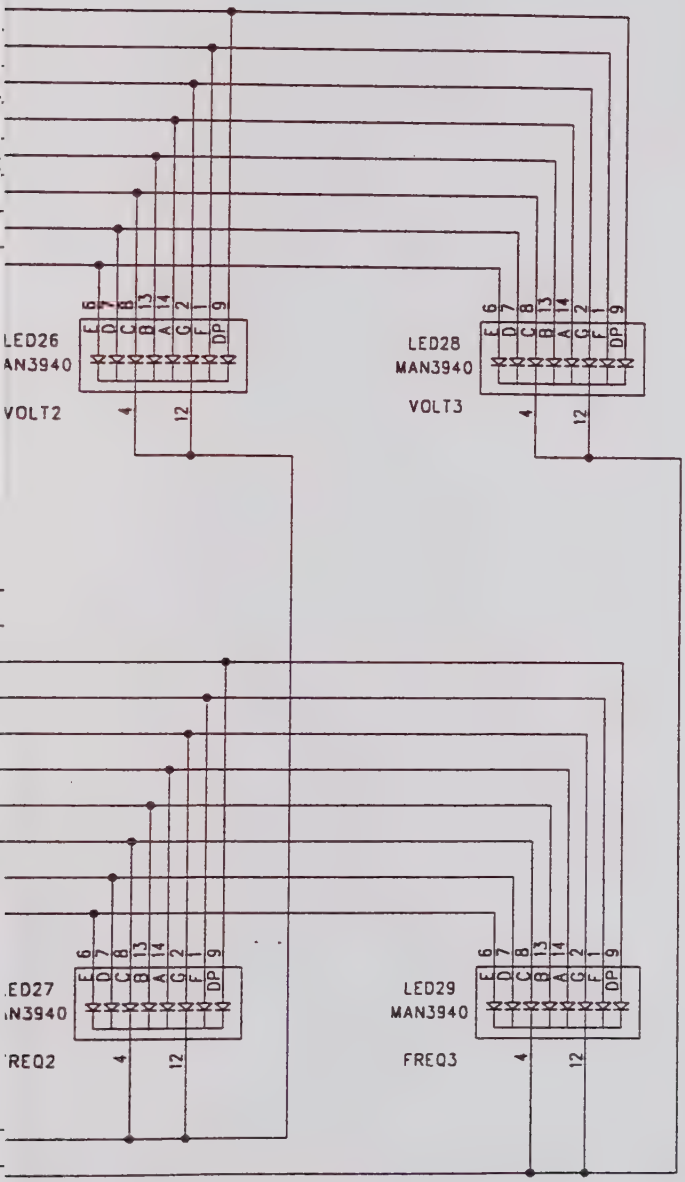

NCY DISPLAY

SIZE		SHEET	REV
B	770000	2 OF 6	B

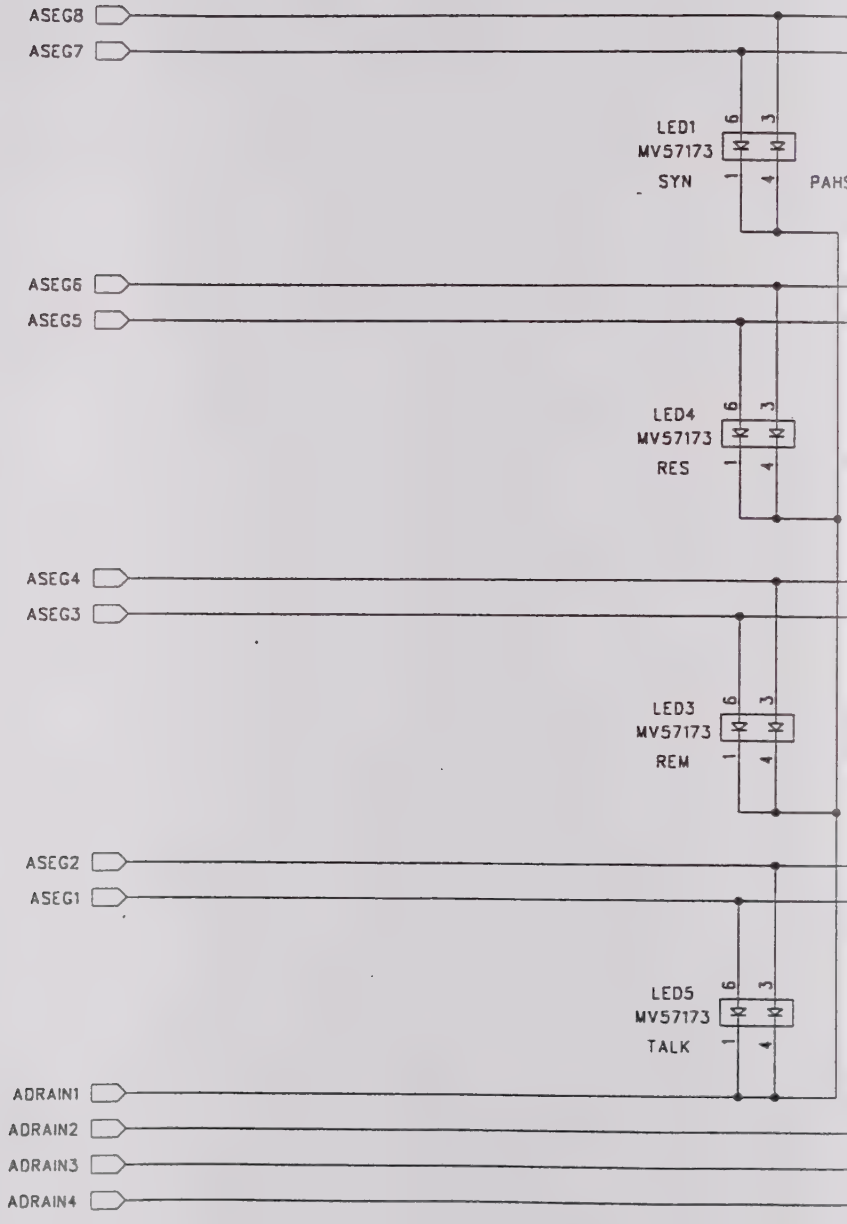
ASEG8
ASEG7
LED1
MV57173
SYN
PAHS
ASEG6
ASEG5
LED4
MV57173
RES
ASEG4
ASEG3
LED3
MV57173
REM
ASEG2
ASEG1
LED5
MV57173
TALK
ADRAIN1
ADRAIN2
ADRAIN3
ADRAIN4

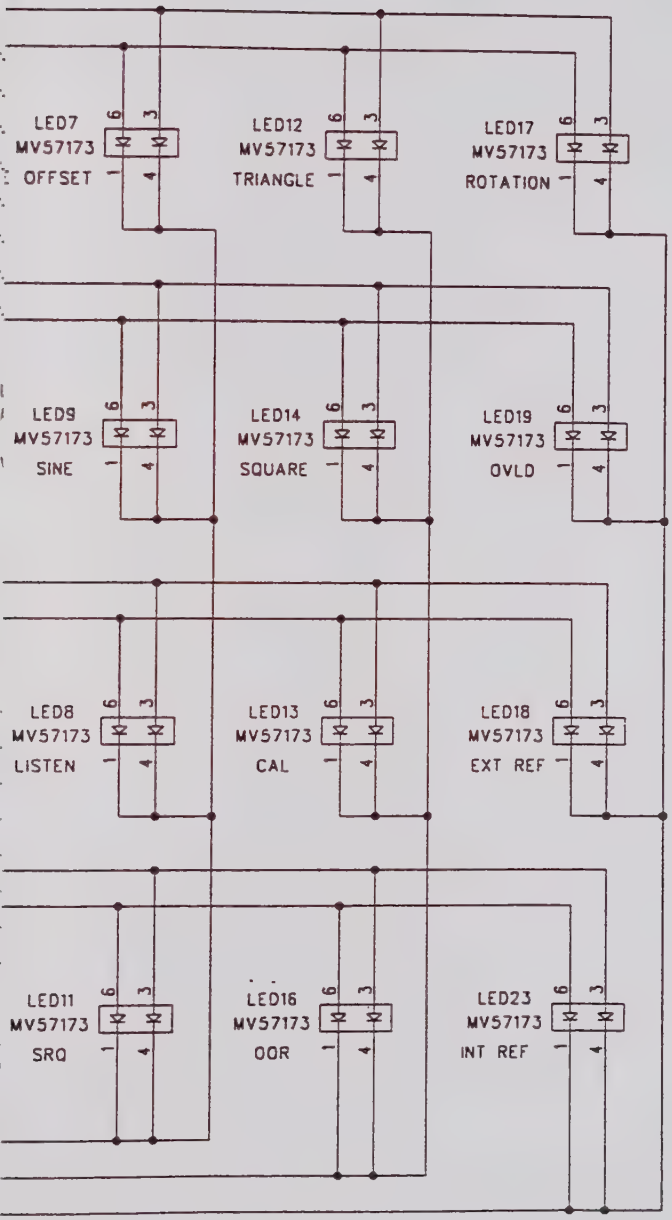

SIZE		SHEET	REV
B	770000	3 OF 6	B

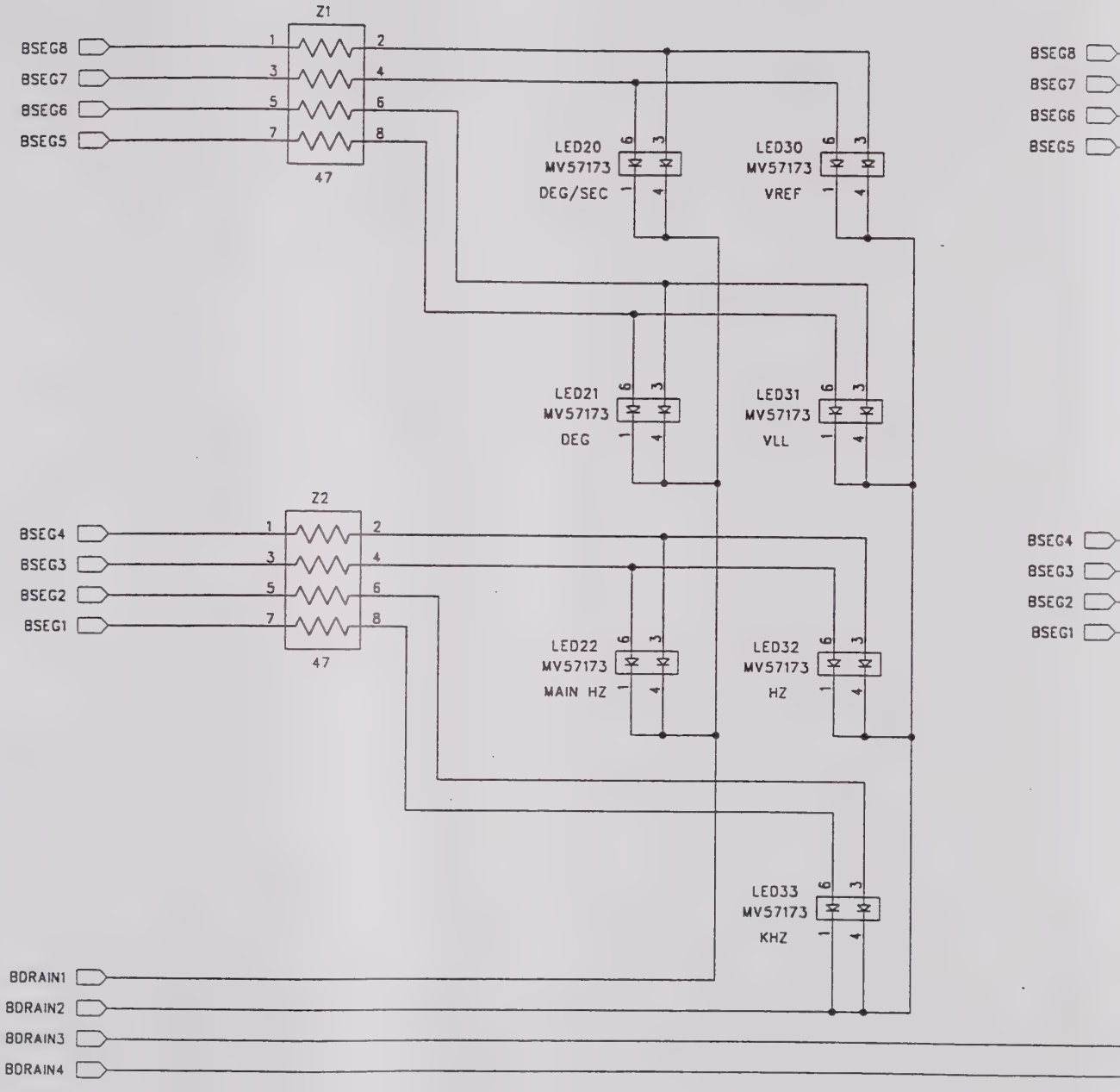
Z1
BSEG8
BSEG7
BSEG6
BSEG5
1
2
3
4
5
6
7
8
47
LED20
MV57173
DEG/SEC
LED30
MV57173
VREF
LED21
MV57173
DEG
LED31
MV57173
VLL
Z2
BSEG4
BSEG3
BSEG2
BSEG1
47
LED22
MV57173
MAIN HZ
LED32
MV57173
HZ
LED33
MV57173
KHZ
BDRAIN1
BDRAIN2
BDRAIN3
BDRAIN4

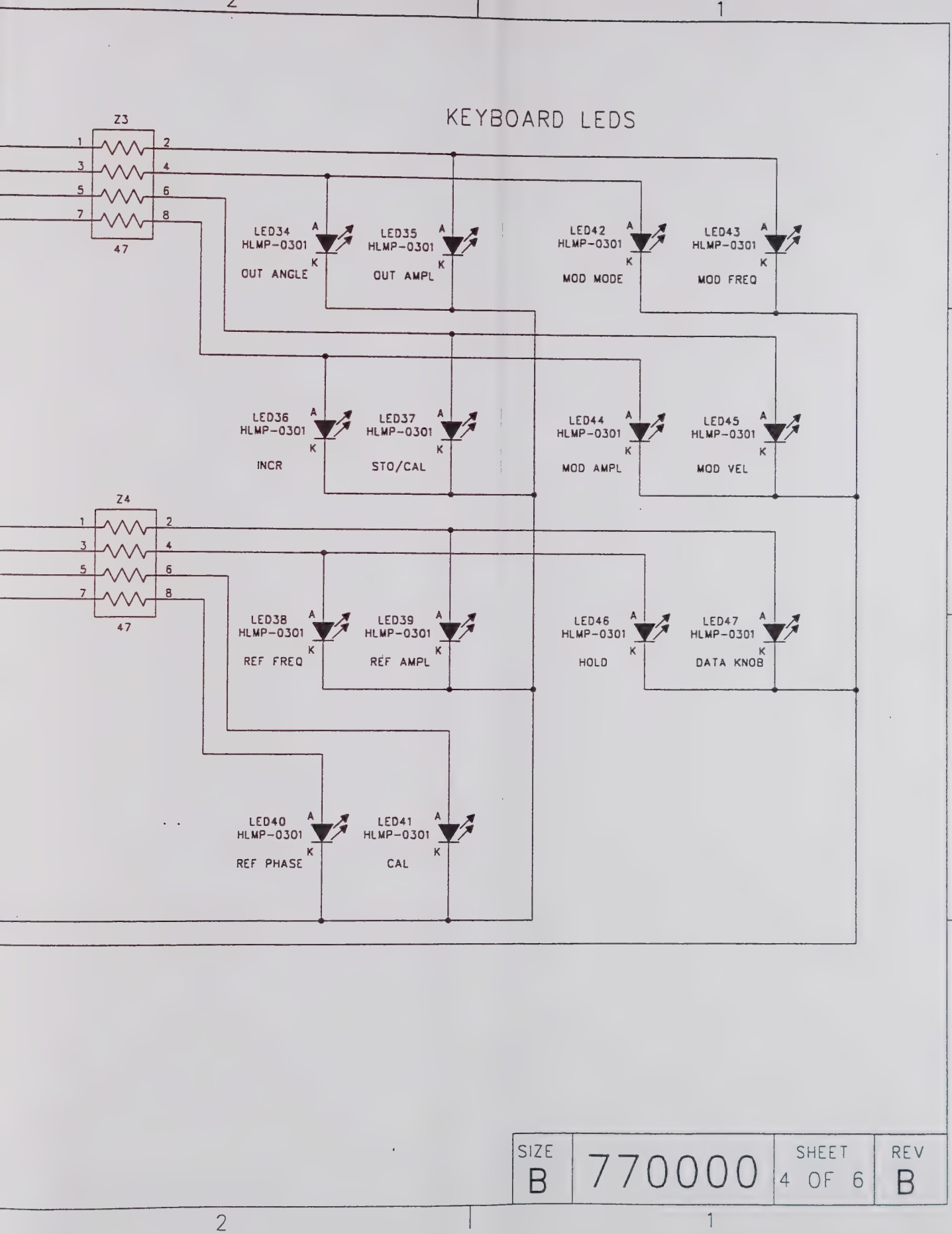
KEYBOARD LEDS
Z3
47
Z4
47
LED34 HLMP-0301 OUT ANGLE
LED35 HLMP-0301 OUT AMPL
LED42 HLMP-0301 MOD MODE
LED43 HLMP-0301 MOD FREQ
LED36 HLMP-0301 INCR
LED37 HLMP-0301 STO/CAL
LED44 HLMP-0301 MOD AMPL
LED45 HLMP-0301 MOD VEL
LED38 HLMP-0301 REF FREQ
LED39 HLMP-0301 REF AMPL
LED46 HLMP-0301 HOLD
LED47 HLMP-0301 DATA KNOB
LED40 HLMP-0301 REF PHASE
LED41 HLMP-0301 CAL
SIZE B
770000
SHEET 4 OF 6
REV B

KEYBOARD

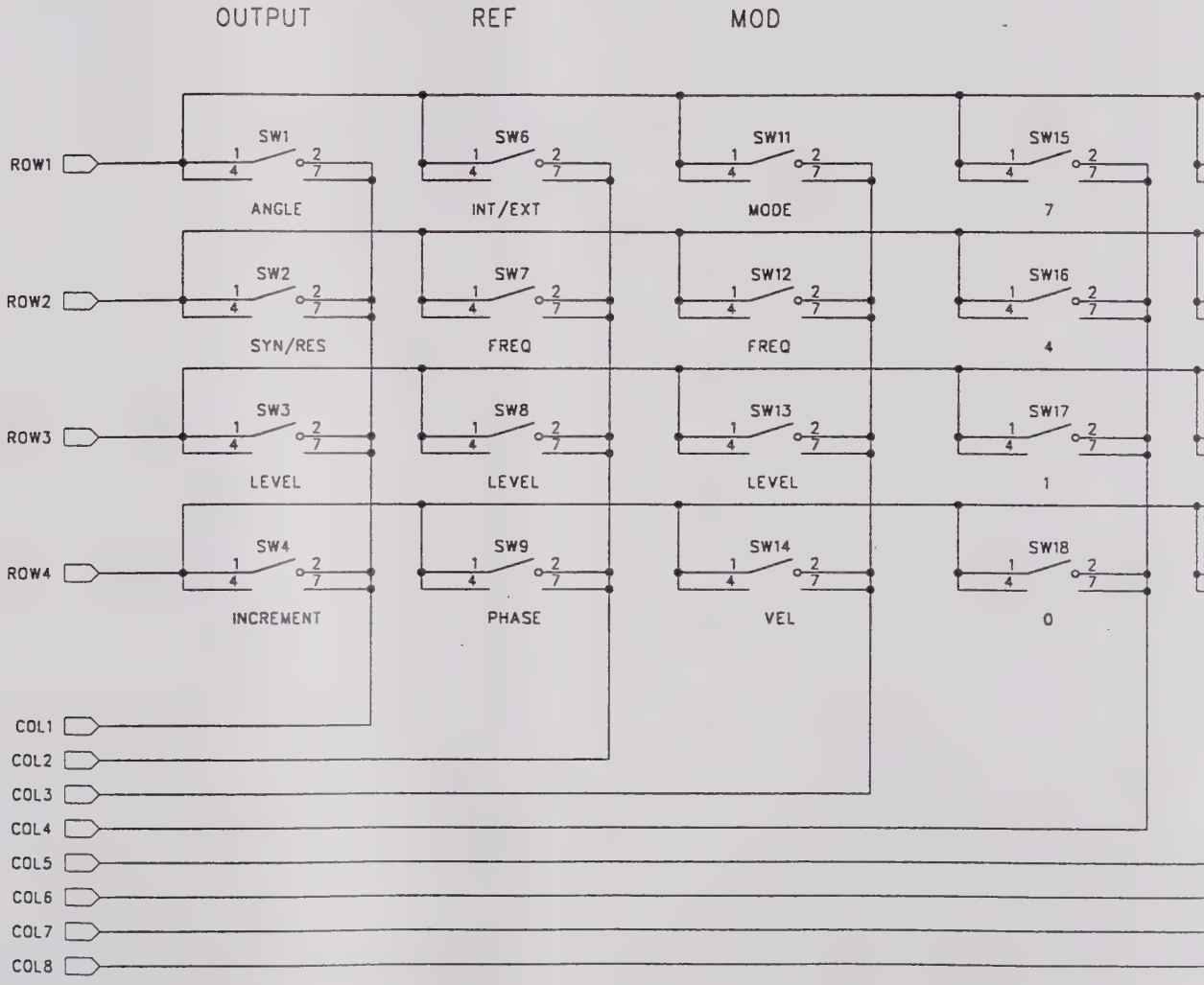
OUTPUT
REF
MOD
ROW1
ROW2
ROW3
ROW4
SW1
SW6
SW11
SW15
ANGLE
INT/EXT
MODE
7
SW2
SW7
SW12
SW16
SYN/RES
FREQ
FREQ
4
SW3
SW8
SW13
SW17
LEVEL
LEVEL
LEVEL
1
SW4
SW9
SW14
SW18
INCREMENT
PHASE
VEL
0
COL1
COL2
COL3
COL4
COL5
COL6
COL7
COL8

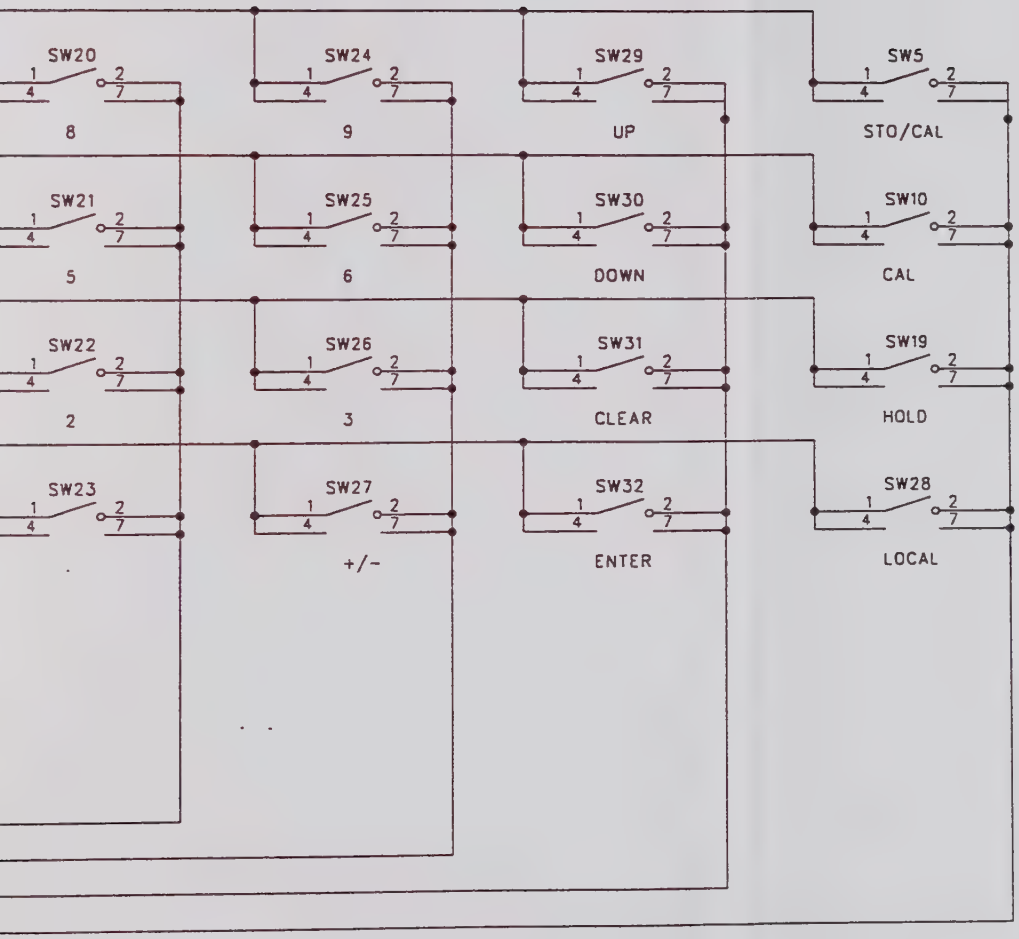

SIZE		SHEET	REV
B	770000	5 OF 6	B

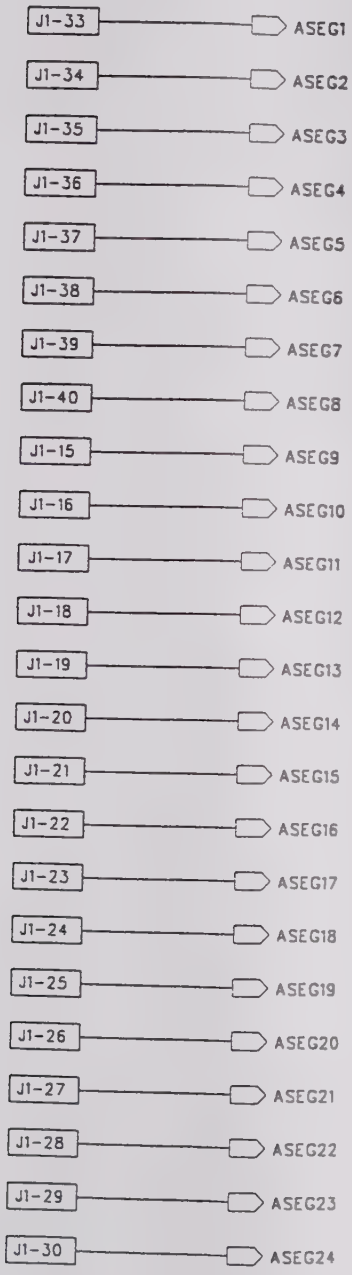
J1-33
ASEG1
J1-34
ASEG2
J1-35
ASEG3
J1-36
ASEG4
J1-37
ASEG5
J1-38
ASEG6
J1-39
ASEG7
J1-40
ASEG8
J1-15
ASEG9
J1-16
ASEG10
J1-17
ASEG11
J1-18
ASEG12
J1-19
ASEG13
J1-20
ASEG14
J1-21
ASEG15
J1-22
ASEG16
J1-23
ASEG17
J1-24
ASEG18
J1-25
ASEG19
J1-26
ASEG20
J1-27
ASEG21
J1-28
ASEG22
J1-29
ASEG23
J1-30
ASEG24

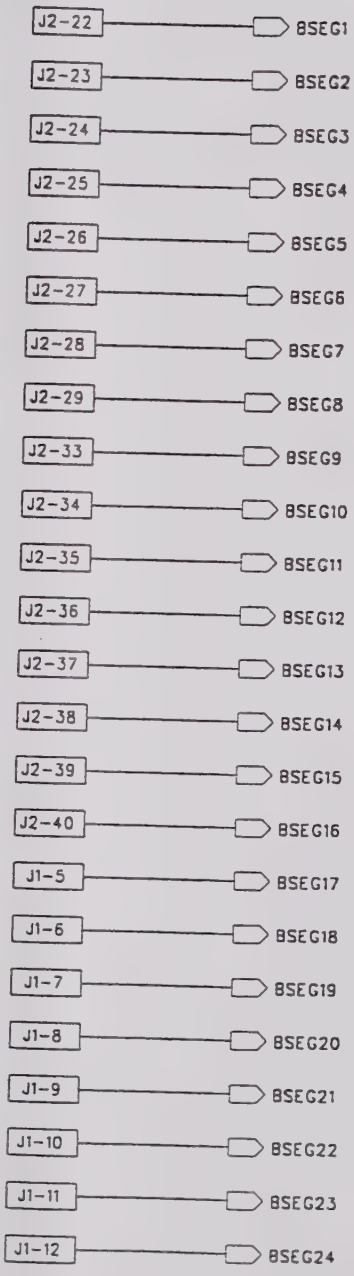
J2-22
BSEG1
J2-23
BSEG2
J2-24
BSEG3
J2-25
BSEG4
J2-26
BSEG5
J2-27
BSEG6
J2-28
BSEG7
J2-29
BSEG8
J2-33
BSEG9
J2-34
BSEG10
J2-35
BSEG11
J2-36
BSEG12
J2-37
BSEG13
J2-38
BSEG14
J2-39
BSEG15
J2-40
BSEG16
J1-5
BSEG17
J1-6
BSEG18
J1-7
BSEG19
J1-8
BSEG20
J1-9
BSEG21
J1-10
BSEG22
J1-11
BSEG23
J1-12
BSEG24

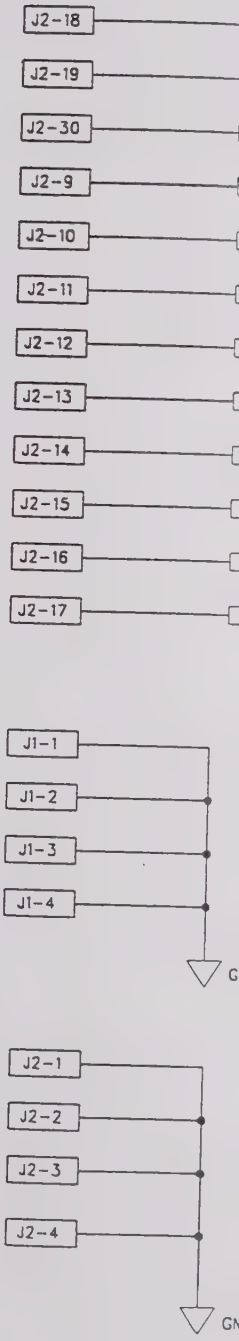
J2-18
J2-19
J2-30
J2-9
J2-10
J2-11
J2-12
J2-13
J2-14
J2-15
J2-16
J2-17
J1-1
J1-2
J1-3
J1-4
G
J2-1
J2-2
J2-3
J2-4
GN

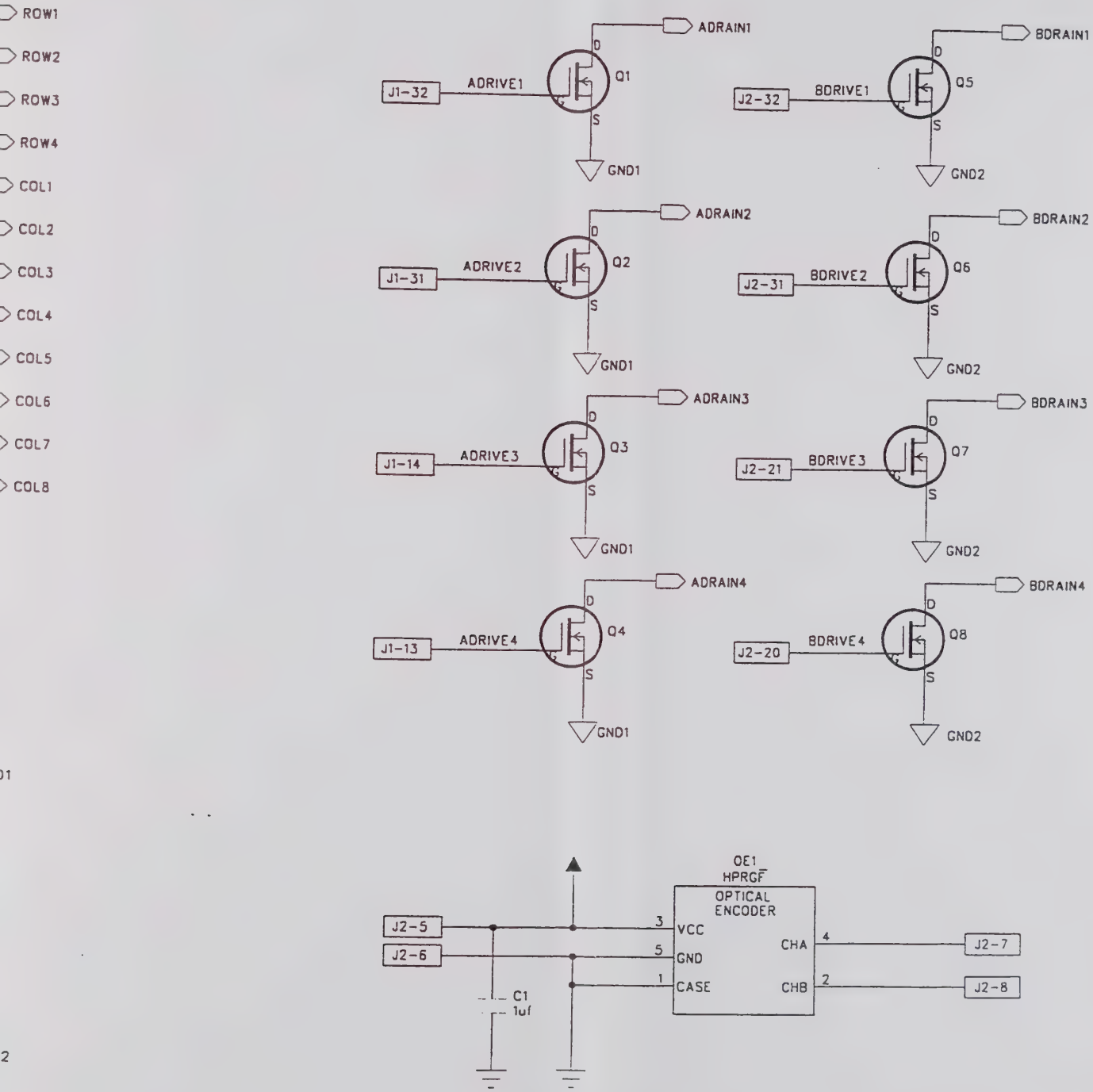

SIZE		SHEET	REV
B	770000	6 OF 6	B

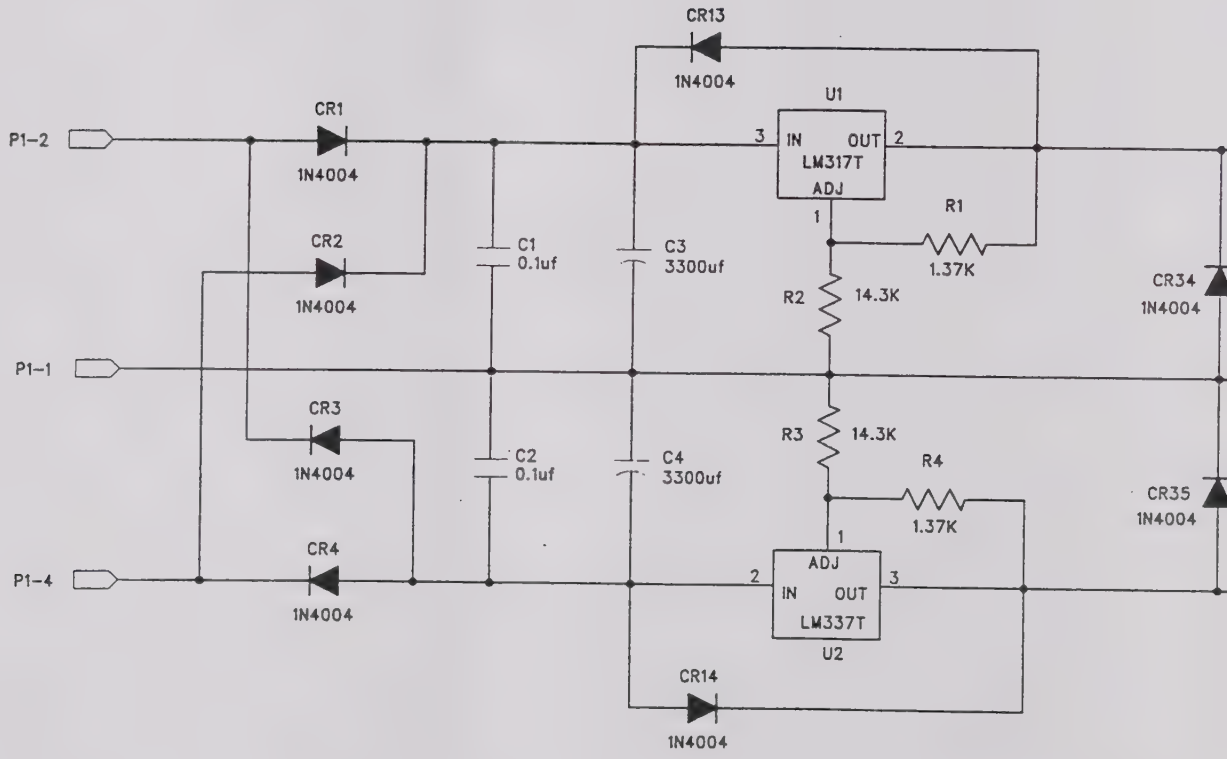
4
3
D
C
B
A
P1-2
P1-1
P1-4
CR1
1N4004
CR2
1N4004
CR3
1N4004
CR4
1N4004
C1
0.1uf
C2
0.1uf
C3
3300uf
C4
3300uf
CR13
1N4004
U1
IN
OUT
LM317T
ADJ
R1
1.37K
R2
14.3K
R3
14.3K
R4
1.37K
CR34
1N4004
CR35
1N4004
ADJ
IN
OUT
LM337T
U2
CR14
1N4004

REVISIONS				
ZONE	LTR	DESCRIPTION	DATE	APPROVED
	A	PRILIMINARY SCHEMATIC	1-17-94	
	B	RELEASE FOR MANUFACTURE		
	C	REVISED PER ECN 33343	4/30/95	

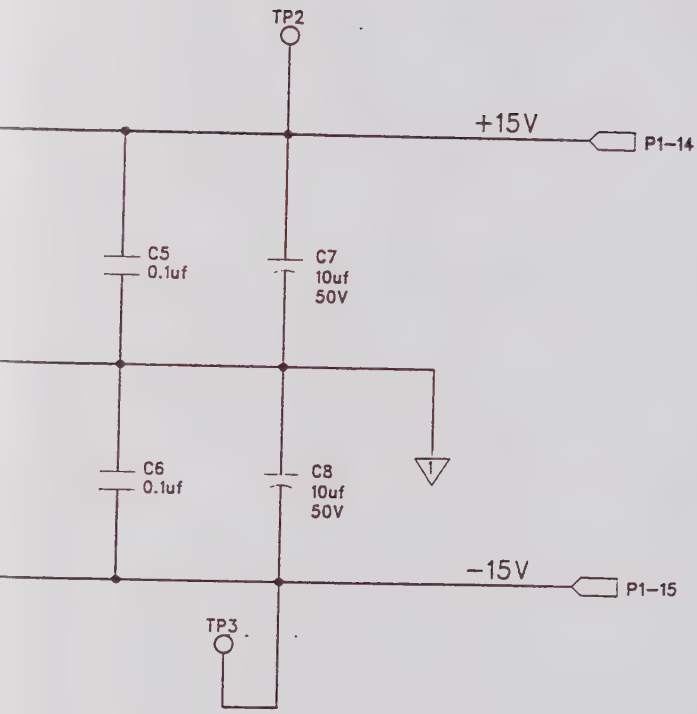

NOTE: ALL CAPS ARE

50V UNLESS SPECIFIED

784003	5300
NEXT ASSY	USED ON

NORTH ATLANTIC INSTRUMENTS INC.

SCHEMATIC

MODEL 5300 ISOLATED POWER SUPPLY

SIZE		SHEET	REV
B	770010	1 OF 3	C

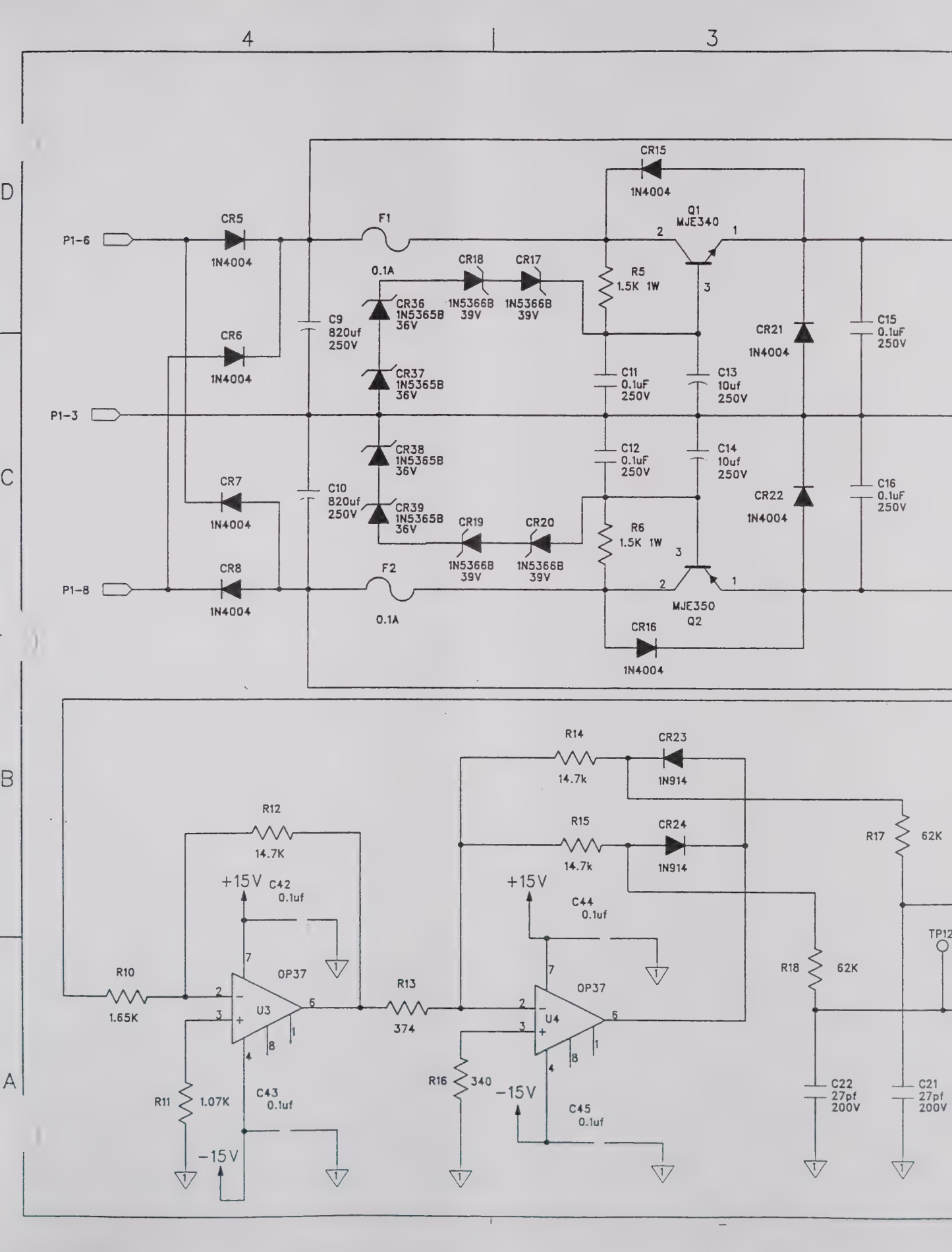
4
3
D
C
B
A
P1-6
P1-3
P1-8
CR5
1N4004
CR6
1N4004
CR7
1N4004
CR8
1N4004
F1
0.1A
F2
0.1A
CR18
1N5366B
39V
CR17
1N5366B
39V
CR19
1N5366B
39V
CR20
1N5366B
39V
CR36
1N5365B
36V
CR37
1N5365B
36V
CR38
1N5365B
36V
CR39
1N5365B
36V
C9
820uf
250V
C10
820uf
250V
CR15
1N4004
CR16
1N4004
Q1
MJE340
MJE350
Q2
R5
1.5K 1W
R6
1.5K 1W
C11
0.1uF
250V
C12
0.1uF
250V
C13
10uf
250V
C14
10uf
250V
CR21
1N4004
CR22
1N4004
C15
0.1uF
250V
C16
0.1uF
250V
R14
14.7k
CR23
1N914
R15
14.7k
CR24
1N914
R17
62K
R18
62K
TP12
R12
14.7K
R10
1.65K
R11
1.07K
R13
374
R16
340
+15V
C42
0.1uf
C43
0.1uf
-15V
C44
0.1uf
C45
0.1uf
OP37
U3
OP37
U4
C22
27pf
200V
C21
27pf
200V

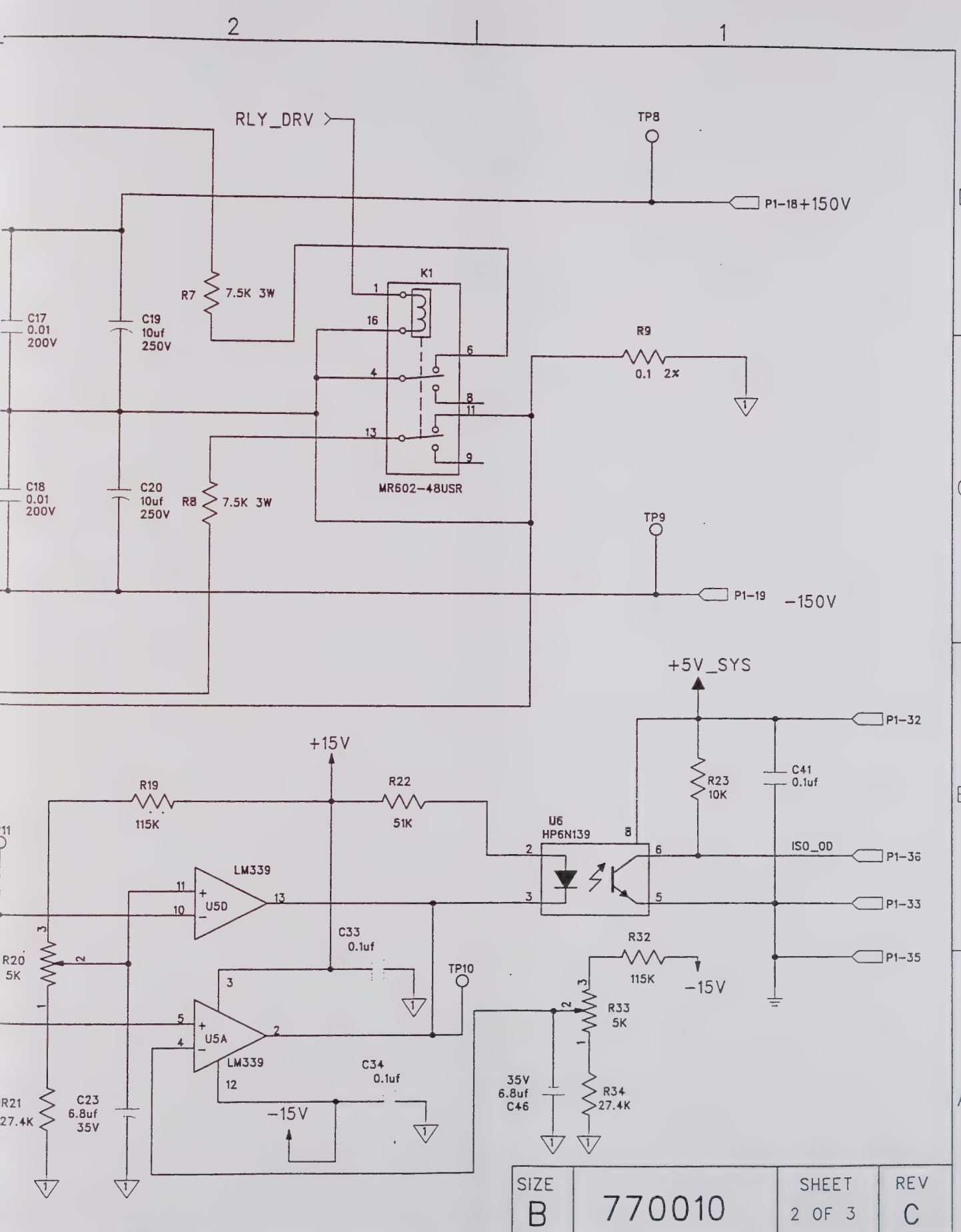
2
1
RLY_DRV
TP8
P1-18+150V
K1
R7
7.5K 3W
C17
0.01
200V
C19
10uf
250V
R9
0.1 2x
C18
0.01
200V
C20
10uf
250V
R8
7.5K 3W
MR602-48USR
TP9
P1-19
-150V
+5V_SYS
P1-32
+15V
R19
115K
R22
51K
R23
10K
C41
0.1uf
U6
HP6N139
ISO_OD
P1-36
P1-33
P1-35
LM339
U5D
C33
0.1uf
R32
115K
-15V
R20
5K
TP10
R33
5K
U5A
LM339
C34
0.1uf
35V
6.8uf
C46
R34
27.4K
R21
27.4K
C23
6.8uf
35V
-15V
SIZE
B
770010
SHEET
2 OF 3
REV
C

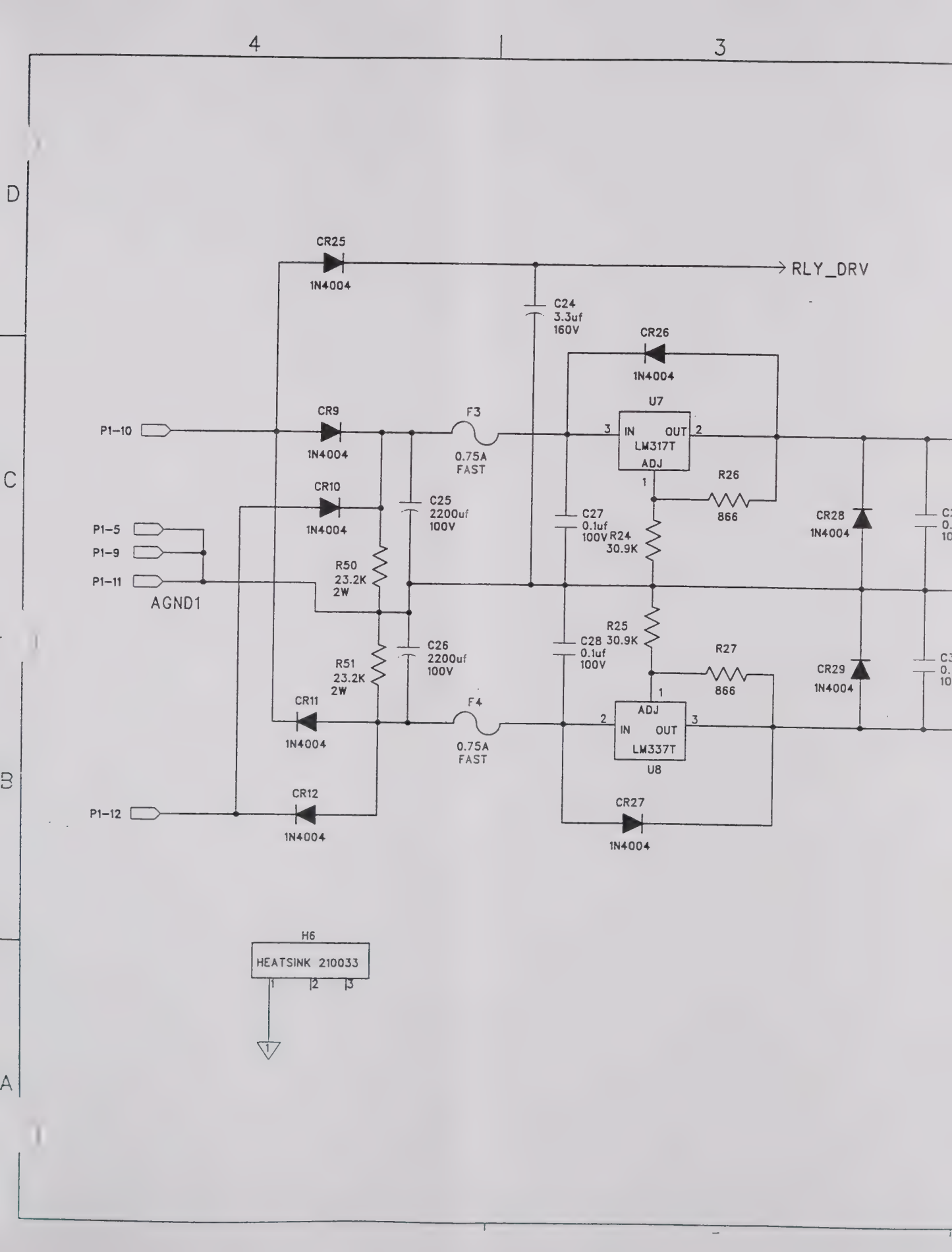
4
3
D
C
B
A
CR25
1N4004
RLY_DRV
C24
3.3uf
160V
CR26
1N4004
U7
P1-10
CR9
1N4004
F3
0.75A
FAST
IN
OUT
LM317T
ADJ
R26
866
CR10
1N4004
C25
2200uf
100V
C27
0.1uf
100V
R24
30.9K
CR28
1N4004
P1-5
P1-9
P1-11
AGND1
R50
23.2K
2W
R25
C28 30.9K
0.1uf
100V
R27
866
CR29
1N4004
R51
23.2K
2W
C26
2200uf
100V
CR11
1N4004
F4
0.75A
FAST
ADJ
IN
OUT
LM337T
U8
P1-12
CR12
1N4004
CR27
1N4004
H6
HEATSINK 210033

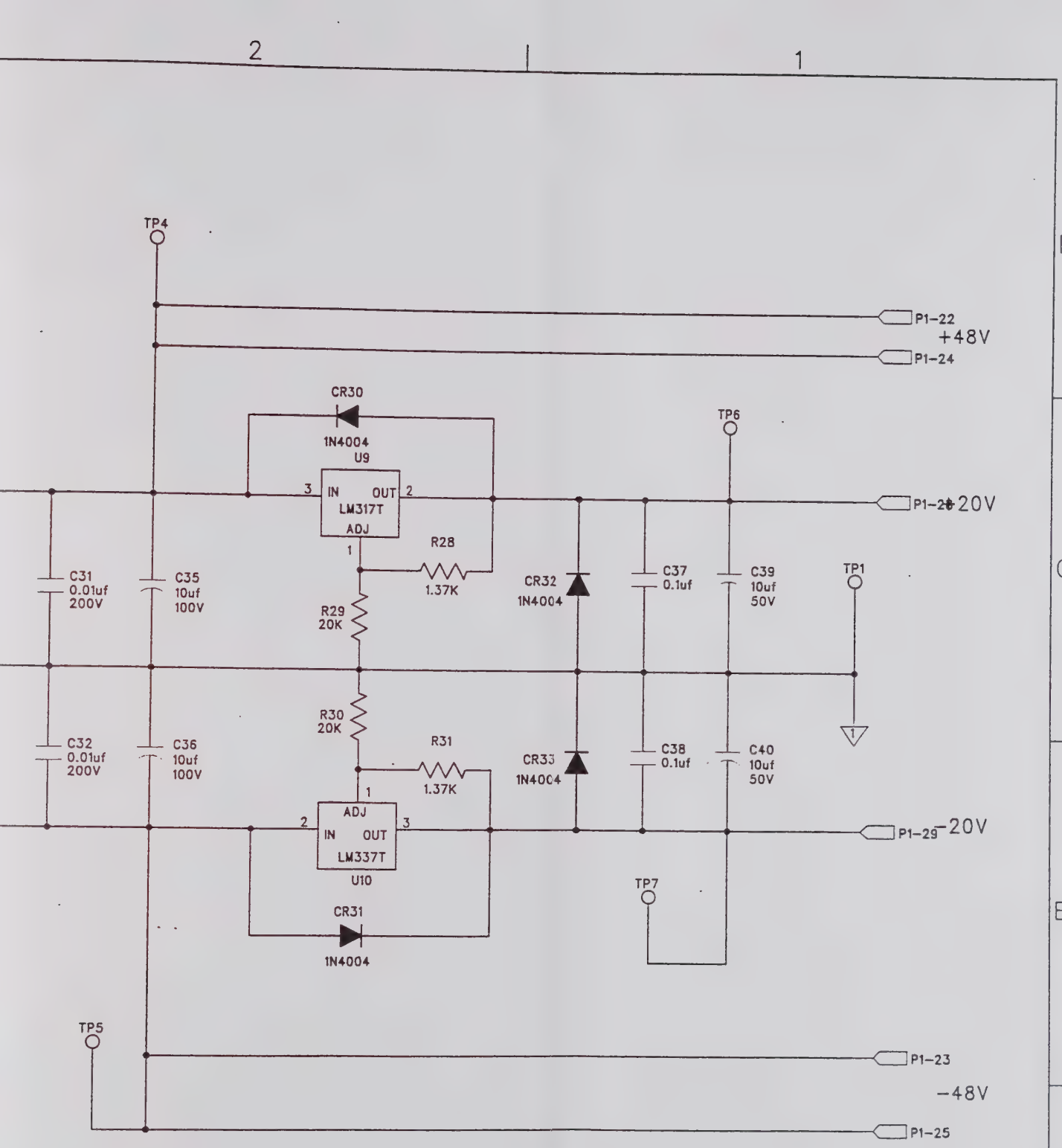

SIZE		SHEET	REV
B	770010	3 OF 3	C

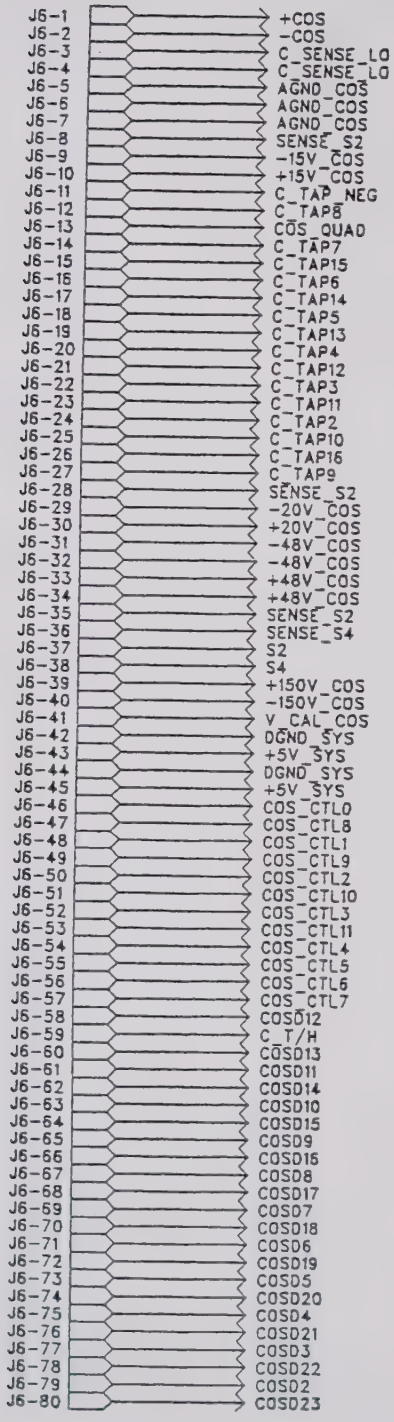
J6-1 +COS
J6-2 -COS
J6-3 C_SENSE_LO
J6-4 C_SENSE_LO
J6-5 AGND_COS
J6-6 AGND_COS
J6-7 AGND_COS
J6-8 SENSE_S2
J6-9 -15V_COS
J6-10 +15V_COS
J6-11 C_TAP_NEG
J6-12 C_TAP8
J6-13 COS_QUAD
J6-14 C_TAP7
J6-15 C_TAP15
J6-16 C_TAP6
J6-17 C_TAP14
J6-18 C_TAP5
J6-19 C_TAP13
J6-20 C_TAP4
J6-21 C_TAP12
J6-22 C_TAP3
J6-23 C_TAP11
J6-24 C_TAP2
J6-25 C_TAP10
J6-26 C_TAP16
J6-27 C_TAP9
J6-28 SENSE_S2
J6-29 -20V_COS
J6-30 +20V_COS
J6-31 -48V_COS
J6-32 -48V_COS
J6-33 +48V_COS
J6-34 +48V_COS
J6-35 SENSE_S2
J6-36 SENSE_S4
J6-37 S2
J6-38 S4
J6-39 +150V_COS
J6-40 -150V_COS
J6-41 V_CAL_COS
J6-42 DGND_SYS
J6-43 +5V_SYS
J6-44 DGND_SYS
J6-45 +5V_SYS
J6-46 COS_CTL0
J6-47 COS_CTL8
J6-48 COS_CTL1
J6-49 COS_CTL9
J6-50 COS_CTL2
J6-51 COS_CTL10
J6-52 COS_CTL3
J6-53 COS_CTL11
J6-54 COS_CTL4
J6-55 COS_CTL5
J6-56 COS_CTL6
J6-57 COS_CTL7
J6-58 COSD12
J6-59 C_T/H
J6-60 COSD13
J6-61 COSD11
J6-62 COSD14
J6-63 COSD10
J6-64 COSD15
J6-65 COSD9
J6-66 COSD16
J6-67 COSD8
J6-68 COSD17
J6-69 COSD7
J6-70 COSD18
J6-71 COSD6
J6-72 COSD19
J6-73 COSD5
J6-74 COSD20
J6-75 COSD4
J6-76 COSD21
J6-77 COSD3
J6-78 COSD22
J6-79 COSD2
J6-80 COSD23

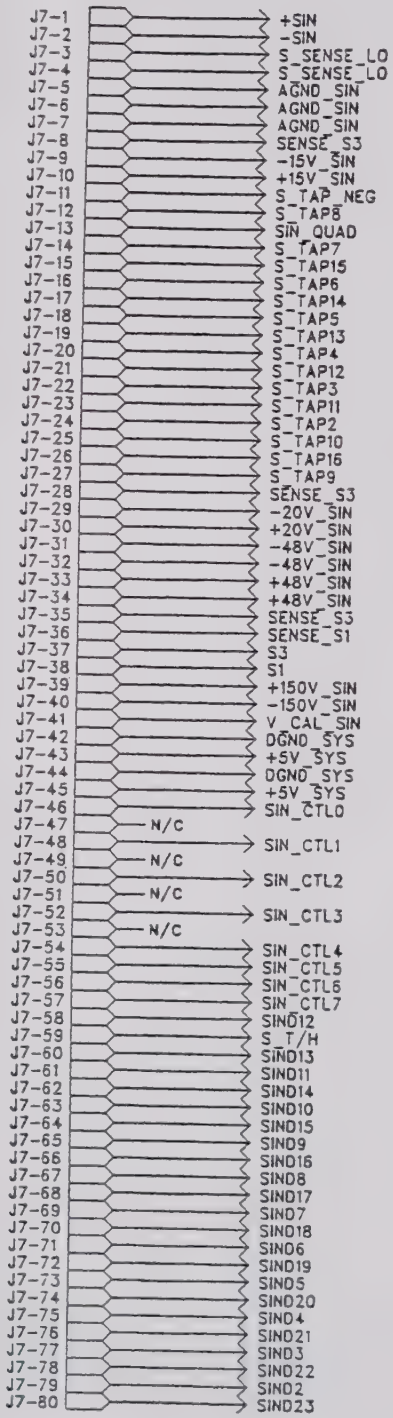
J7-1 +SIN
J7-2 -SIN
J7-3 S_SENSE_LO
J7-4 S_SENSE_LO
J7-5 AGND_SIN
J7-6 AGND_SIN
J7-7 AGND_SIN
J7-8 SENSE_S3
J7-9 -15V_SIN
J7-10 +15V_SIN
J7-11 S_TAP_NEG
J7-12 S_TAP8
J7-13 SIN_QUAD
J7-14 S_TAP7
J7-15 S_TAP15
J7-16 S_TAP6
J7-17 S_TAP14
J7-18 S_TAP5
J7-19 S_TAP13
J7-20 S_TAP4
J7-21 S_TAP12
J7-22 S_TAP3
J7-23 S_TAP11
J7-24 S_TAP2
J7-25 S_TAP10
J7-26 S_TAP16
J7-27 S_TAP9
J7-28 SENSE_S3
J7-29 -20V_SIN
J7-30 +20V_SIN
J7-31 -48V_SIN
J7-32 -48V_SIN
J7-33 +48V_SIN
J7-34 +48V_SIN
J7-35 SENSE_S3
J7-36 SENSE_S1
J7-37 S3
J7-38 S1
J7-39 +150V_SIN
J7-40 -150V_SIN
J7-41 V_CAL_SIN
J7-42 DGND_SYS
J7-43 +5V_SYS
J7-44 DGND_SYS
J7-45 +5V_SYS
J7-46 SIN_CTL0
J7-47 N/C
J7-48 SIN_CTL1
J7-49 N/C
J7-50 SIN_CTL2
J7-51 N/C
J7-52 SIN_CTL3
J7-53 N/C
J7-54 SIN_CTL4
J7-55 SIN_CTL5
J7-56 SIN_CTL6
J7-57 SIN_CTL7
J7-58 SIND12
J7-59 S_T/H
J7-60 SIND13
J7-61 SIND11
J7-62 SIND14
J7-63 SIND10
J7-64 SIND15
J7-65 SIND9
J7-66 SIND16
J7-67 SIND8
J7-68 SIND17
J7-69 SIND7
J7-70 SIND18
J7-71 SIND6
J7-72 SIND19
J7-73 SIND5
J7-74 SIND20
J7-75 SIND4
J7-76 SIND21
J7-77 SIND3
J7-78 SIND22
J7-79 SIND2
J7-80 SIND23

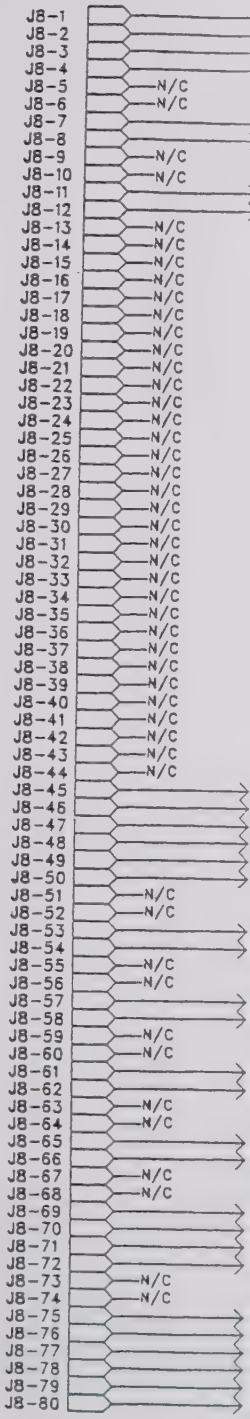
J8-1
J8-2
J8-3
J8-4
J8-5 N/C
J8-6 N/C
J8-7
J8-8
J8-9 N/C
J8-10 N/C
J8-11
J8-12
J8-13 N/C
J8-14 N/C
J8-15 N/C
J8-16 N/C
J8-17 N/C
J8-18 N/C
J8-19 N/C
J8-20 N/C
J8-21 N/C
J8-22 N/C
J8-23 N/C
J8-24 N/C
J8-25 N/C
J8-26 N/C
J8-27 N/C
J8-28 N/C
J8-29 N/C
J8-30 N/C
J8-31 N/C
J8-32 N/C
J8-33 N/C
J8-34 N/C
J8-35 N/C
J8-36 N/C
J8-37 N/C
J8-38 N/C
J8-39 N/C
J8-40 N/C
J8-41 N/C
J8-42 N/C
J8-43 N/C
J8-44 N/C
J8-45
J8-46
J8-47
J8-48
J8-49
J8-50
J8-51 N/C
J8-52 N/C
J8-53
J8-54
J8-55 N/C
J8-56 N/C
J8-57
J8-58
J8-59 N/C
J8-60 N/C
J8-61
J8-62
J8-63 N/C
J8-64 N/C
J8-65
J8-66
J8-67 N/C
J8-68 N/C
J8-69
J8-70
J8-71
J8-72
J8-73 N/C
J8-74 N/C
J8-75
J8-76
J8-77
J8-78
J8-79
J8-80

REVISIONS				
ZONE	LTR	DESCRIPTION	DATE	APPROVED
	1	FIRST DRAFT	2/1/94	
	A	RELEASE FOR MANUFACTURE	2/10/94	PVR
	B	REVISED SENSE CONNECTIONS	7/21/94	PVR

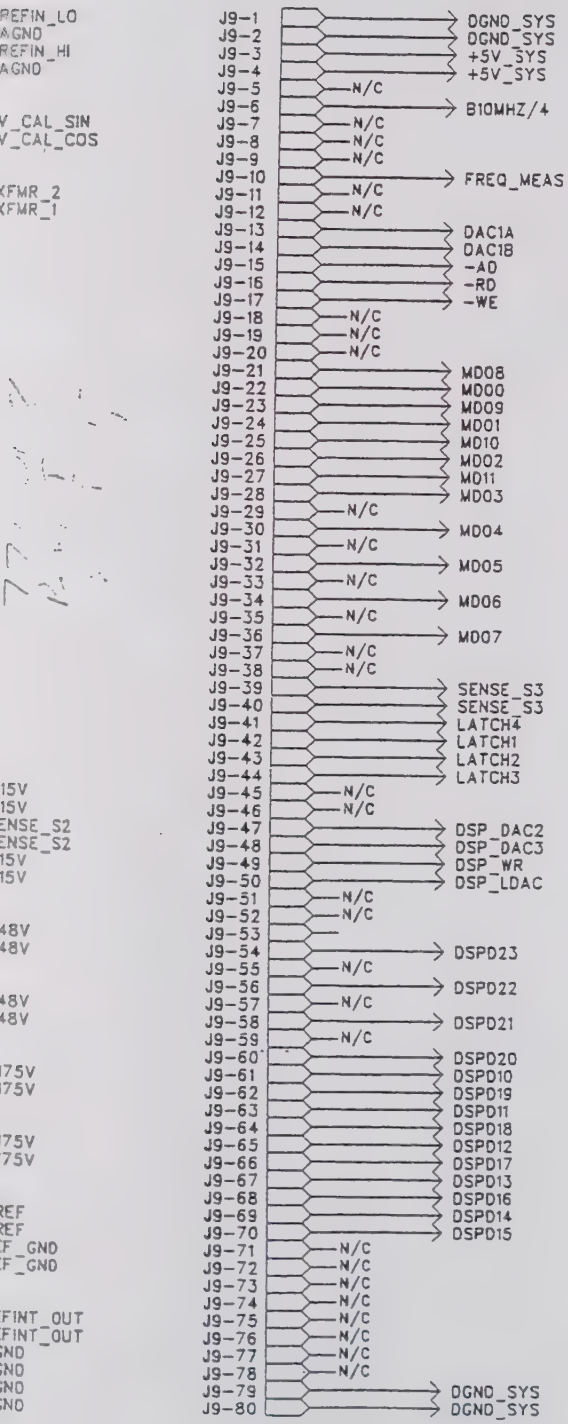

NORTH ATLANTIC INSTRUMENTS INC.

SCHEMATIC DIAGRAM,

5300 ANALOG INTERCONNECT BOARD

784011	5300
NEXT ASSY	USED ON

SIZE		SHEET	REV
B	770008	1 OF 3	B

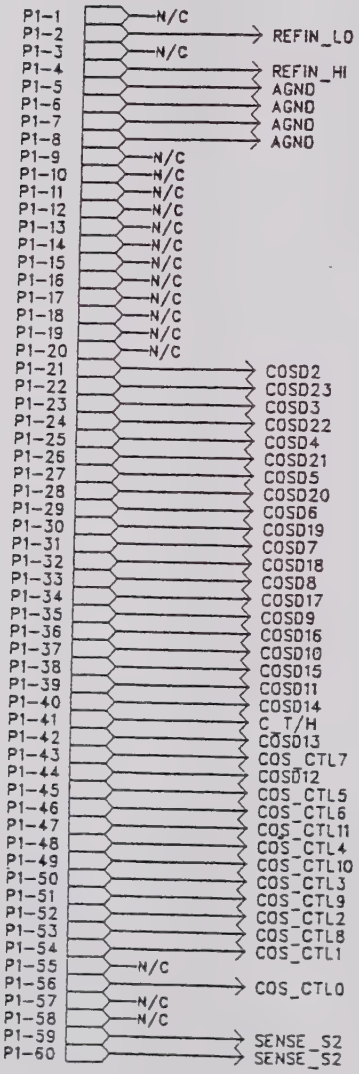
P1-1 N/C
P1-2 REFIN_LO
P1-3 N/C
P1-4 REFIN_HI
P1-5 AGND
P1-6 AGND
P1-7 AGND
P1-8 AGND
P1-9 N/C
P1-10 N/C
P1-11 N/C
P1-12 N/C
P1-13 N/C
P1-14 N/C
P1-15 N/C
P1-16 N/C
P1-17 N/C
P1-18 N/C
P1-19 N/C
P1-20 N/C
P1-21 COSD2
P1-22 COSD23
P1-23 COSD3
P1-24 COSD22
P1-25 COSD4
P1-26 COSD21
P1-27 COSD5
P1-28 COSD20
P1-29 COSD6
P1-30 COSD19
P1-31 COSD7
P1-32 COSD18
P1-33 COSD8
P1-34 COSD17
P1-35 COSD9
P1-36 COSD16
P1-37 COSD10
P1-38 COSD15
P1-39 COSD11
P1-40 COSD14
P1-41 C_T/H
P1-42 COSD13
P1-43 COS_CTL7
P1-44 COSD12
P1-45 COS_CTL5
P1-46 COS_CTL6
P1-47 COS_CTL11
P1-48 COS_CTL4
P1-49 COS_CTL10
P1-50 COS_CTL3
P1-51 COS_CTL9
P1-52 COS_CTL2
P1-53 COS_CTL8
P1-54 COS_CTL1
P1-55 N/C
P1-56 COS_CTL0
P1-57 N/C
P1-58 N/C
P1-59 SENSE_S2
P1-60 SENSE_S2

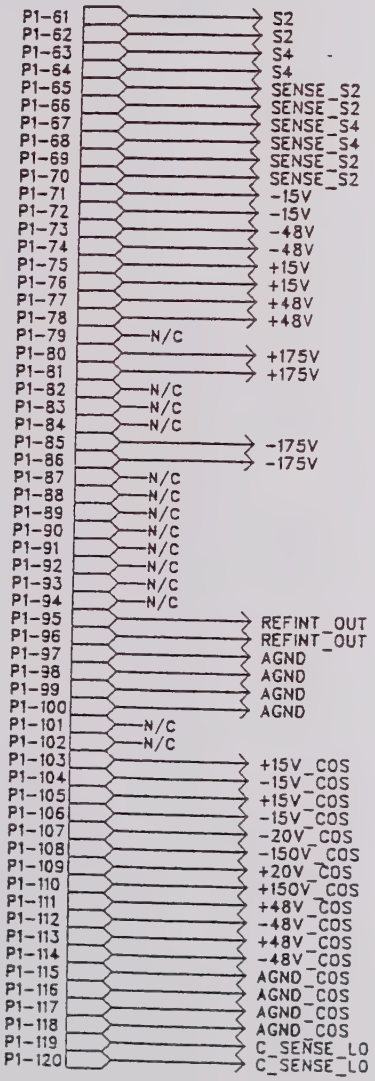
P1-61 S2
P1-62 S2
P1-63 S4
P1-64 S4
P1-65 SENSE_S2
P1-66 SENSE_S2
P1-67 SENSE_S4
P1-68 SENSE_S4
P1-69 SENSE_S2
P1-70 SENSE_S2
P1-71 -15V
P1-72 -15V
P1-73 -48V
P1-74 -48V
P1-75 +15V
P1-76 +15V
P1-77 +48V
P1-78 +48V
P1-79 N/C
P1-80 +175V
P1-81 +175V
P1-82 N/C
P1-83 N/C
P1-84 N/C
P1-85 -175V
P1-86 -175V
P1-87 N/C
P1-88 N/C
P1-89 N/C
P1-90 N/C
P1-91 N/C
P1-92 N/C
P1-93 N/C
P1-94 N/C
P1-95 REFINT_OUT
P1-96 REFINT_OUT
P1-97 AGND
P1-98 AGND
P1-99 AGND
P1-100 AGND
P1-101 N/C
P1-102 N/C
P1-103 +15V_COS
P1-104 -15V_COS
P1-105 +15V_COS
P1-106 -15V_COS
P1-107 -20V_COS
P1-108 -150V_COS
P1-109 +20V_COS
P1-110 +150V_COS
P1-111 +48V_COS
P1-112 -48V_COS
P1-113 +48V_COS
P1-114 -48V_COS
P1-115 AGND_COS
P1-116 AGND_COS
P1-117 AGND_COS
P1-118 AGND_COS
P1-119 C_SENSE_LO
P1-120 C_SENSE_LO

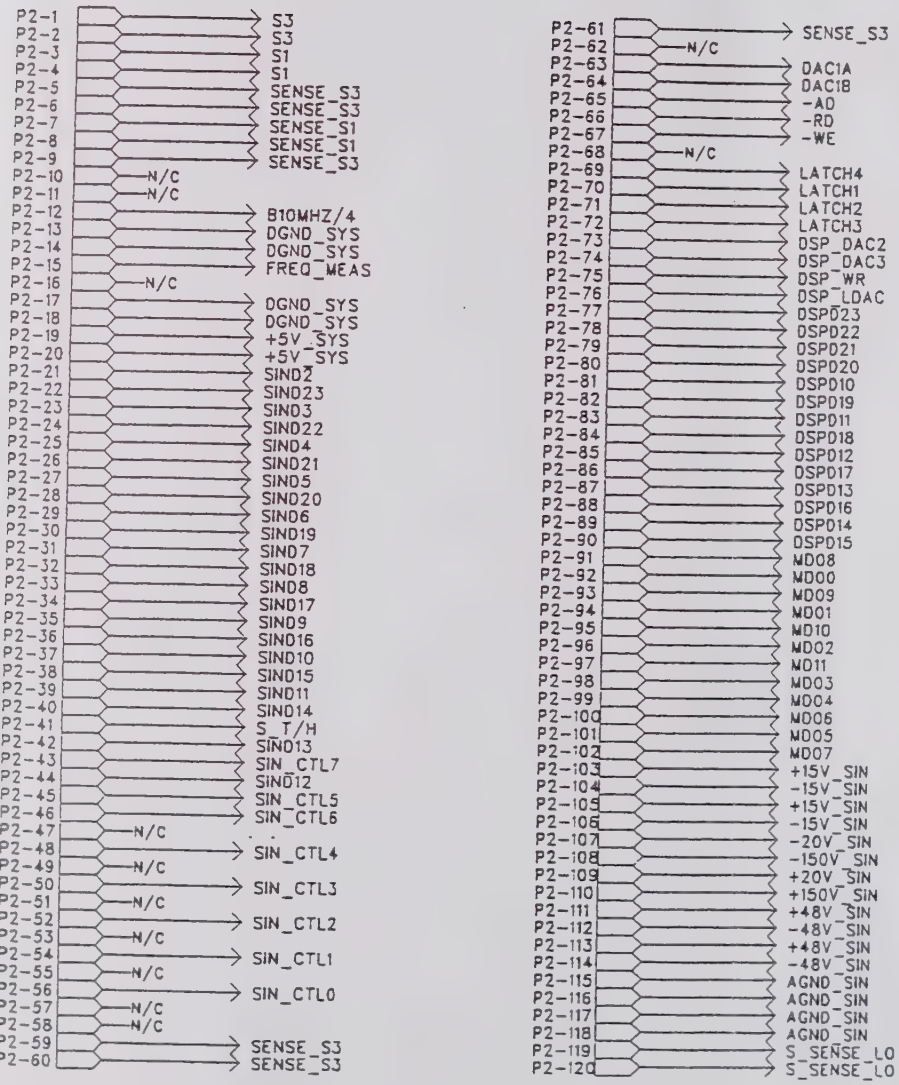

SIZE		SHEET	REV
B	770008	2 OF 3	B

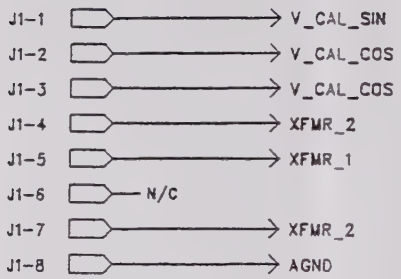
J1-1
V_CAL_SIN
J1-2
V_CAL_COS
J1-3
V_CAL_COS
J1-4
XFMR_2
J1-5
XFMR_1
J1-6
N/C
J1-7
XFMR_2
J1-8
AGND

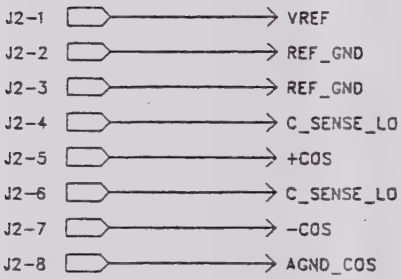
J2-1
VREF
J2-2
REF_GND
J2-3
REF_GND
J2-4
C_SENSE_LO
J2-5
+COS
J2-6
C_SENSE_LO
J2-7
-COS
J2-8
AGND_COS

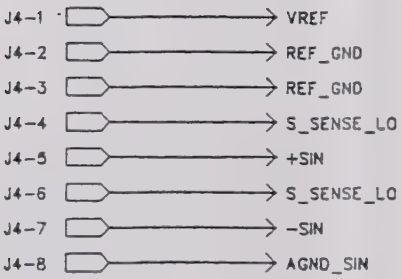
J4-1
VREF
J4-2
REF_GND
J4-3
REF_GND
J4-4
S_SENSE_LO
J4-5
+SIN
J4-6
S_SENSE_LO
J4-7
-SIN
J4-8
AGND_SIN

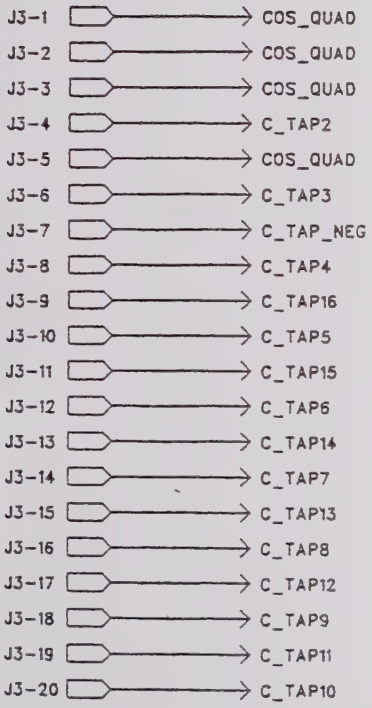
J3-1
COS_QUAD
J3-2
COS_QUAD
J3-3
COS_QUAD
J3-4
C_TAP2
J3-5
COS_QUAD
J3-6
C_TAP3
J3-7
C_TAP_NEG
J3-8
C_TAP4
J3-9
C_TAP16
J3-10
C_TAP5
J3-11
C_TAP15
J3-12
C_TAP6
J3-13
C_TAP14
J3-14
C_TAP7
J3-15
C_TAP13
J3-16
C_TAP8
J3-17
C_TAP12
J3-18
C_TAP9
J3-19
C_TAP11
J3-20
C_TAP10

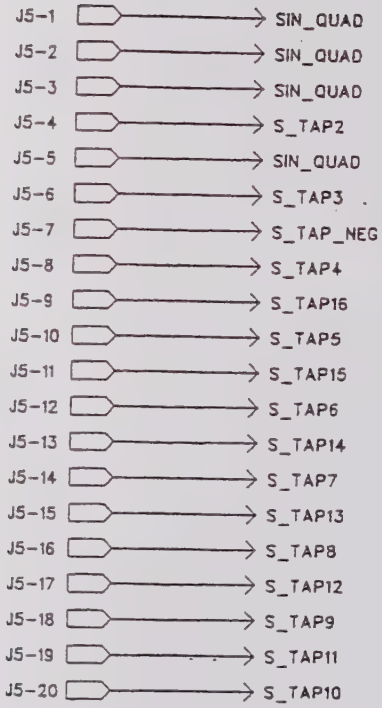

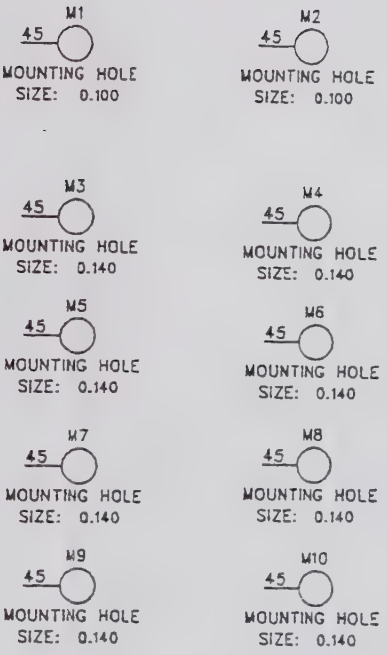

SIZE		SHEET	REV
B	770008	3 OF 3	B

TO SIN/COS BOARD

J6-1	+COS
J6-2	-COS
J6-3	C_SENSE_LO
J6-4	C_SENSE_LO
J6-5	AGND_COS
J6-6	AGND_COS
J6-7	AGND_COS
J6-8	SENSE_S2
J6-9	-15V_COS
J6-10	+15V_COS
J6-11	C_TAP_NEG
J6-12	C_TAP8
J6-13	COS_QUAD
J6-14	C_TAP7
J6-15	C_TAP15
J6-16	C_TAP6
J6-17	C_TAP14
J6-18	C_TAP5
J6-19	C_TAP13
J6-20	C_TAP4
J6-21	C_TAP12
J6-22	C_TAP3
J6-23	C_TAP11
J6-24	C_TAP2
J6-25	C_TAP10
J6-26	C_TAP16
J6-27	C_TAP9
J6-28	SENSE_S2
J6-29	-20V_COS
J6-30	+20V_COS
J6-31	-48V_COS
J6-32	-48V_COS
J6-33	+48V_COS
J6-34	+48V_COS
J6-35	SENSE_S2
J6-36	SENSE_S4
J6-37	S2
J6-38	S4
J6-39	+150V_COS
J6-40	-150V_COS
J6-41	V_CAL_COS
J6-42	DGND_SYS
J6-43	+5V_SYS
J6-44	DGND_SYS
J6-45	+5V_SYS
J6-46	COS_CTL0
J6-47	COS_CTL8
J6-48	COS_CTL1
J6-49	COS_CTL9
J6-50	COS_CTL2
J6-51	COS_CTL10
J6-52	COS_CTL3
J6-53	COS_CTL11
J6-54	COS_CTL4
J6-55	COS_CTL5
J6-56	COS_CTL6
J6-57	COS_CTL7
J6-58	COSD12
J6-59	C_T/H
J6-60	COSD13
J6-61	COSD11
J6-62	COSD14
J6-63	COSD10
J6-64	COSD15
J6-65	COSD9
J6-66	COSD16
J6-67	COSD8
J6-68	COSD17
J6-69	COSD7
J6-70	COSD18
J6-71	COSD6
J6-72	COSD19
J6-73	COSD5
J6-74	COSD20
J6-75	COSD4
J6-76	COSD21
J6-77	COSD3
J6-78	COSD22
J6-79	COSD2
J6-80	COSD23

J7-1	+SIN
J7-2	-SIN
J7-3	S_SENSE_LO
J7-4	S_SENSE_LO
J7-5	AGND_SIN
J7-6	AGND_SIN
J7-7	AGND_SIN
J7-8	SENSE_S3
J7-9	-15V_SIN
J7-10	+15V_SIN
J7-11	S_TAP_NEG
J7-12	S_TAP8
J7-13	SIN_QUAD
J7-14	S_TAP7
J7-15	S_TAP15
J7-16	S_TAP6
J7-17	S_TAP14
J7-18	S_TAP5
J7-19	S_TAP13
J7-20	S_TAP4
J7-21	S_TAP12
J7-22	S_TAP3
J7-23	S_TAP11
J7-24	S_TAP2
J7-25	S_TAP10
J7-26	S_TAP16
J7-27	S_TAP9
J7-28	SENSE_S3
J7-29	-20V_SIN
J7-30	+20V_SIN
J7-31	-48V_SIN
J7-32	-48V_SIN
J7-33	+48V_SIN
J7-34	+48V_SIN
J7-35	SENSE_S3
J7-36	SENSE_S1
J7-37	S3
J7-38	S1
J7-39	+150V_SIN
J7-40	-150V_SIN
J7-41	V_CAL_SIN
J7-42	DGND_SYS
J7-43	+5V_SYS
J7-44	DGND_SYS
J7-45	+5V_SYS
J7-46	SIN_CTL0
J7-47	N/C
J7-48	SIN_CTL1
J7-49	N/C
J7-50	SIN_CTL2
J7-51	N/C
J7-52	SIN_CTL3
J7-53	N/C
J7-54	SIN_CTL4
J7-55	SIN_CTL5
J7-56	SIN_CTL6
J7-57	SIN_CTL7
J7-58	SIND12
J7-59	S_T/H
J7-60	SIND13
J7-61	SIND11
J7-62	SIND14
J7-63	SIND10
J7-64	SIND15
J7-65	SIND9
J7-66	SIND16
J7-67	SIND8
J7-68	SIND17
J7-69	SIND7
J7-70	SIND18
J7-71	SIND6
J7-72	SIND19
J7-73	SIND5
J7-74	SIND20
J7-75	SIND4
J7-76	SIND21
J7-77	SIND3
J7-78	SIND22
J7-79	SIND2
J7-80	SIND23

J8-1	
J8-2	
J8-3	
J8-4	
J8-5	N/C
J8-6	N/C
J8-7	
J8-8	
J8-9	N/C
J8-10	N/C
J8-11	
J8-12	
J8-13	N/C
J8-14	N/C
J8-15	N/C
J8-16	N/C
J8-17	N/C
J8-18	N/C
J8-19	N/C
J8-20	N/C
J8-21	N/C
J8-22	N/C
J8-23	N/C
J8-24	N/C
J8-25	N/C
J8-26	N/C
J8-27	N/C
J8-28	N/C
J8-29	N/C
J8-30	N/C
J8-31	N/C
J8-32	N/C
J8-33	N/C
J8-34	N/C
J8-35	N/C
J8-36	N/C
J8-37	N/C
J8-38	N/C
J8-39	N/C
J8-40	N/C
J8-41	N/C
J8-42	N/C
J8-43	N/C
J8-44	N/C
J8-45	
J8-46	
J8-47	
J8-48	
J8-49	
J8-50	
J8-51	N/C
J8-52	N/C
J8-53	
J8-54	
J8-55	N/C
J8-56	N/C
J8-57	
J8-58	
J8-59	N/C
J8-60	N/C
J8-61	
J8-62	
J8-63	N/C
J8-64	N/C
J8-65	
J8-66	
J8-67	N/C
J8-68	N/C
J8-69	
J8-70	
J8-71	
J8-72	
J8-73	N/C
J8-74	N/C
J8-75	
J8-76	
J8-77	
J8-78	
J8-79	
J8-80	

TO ANALOG BOARD

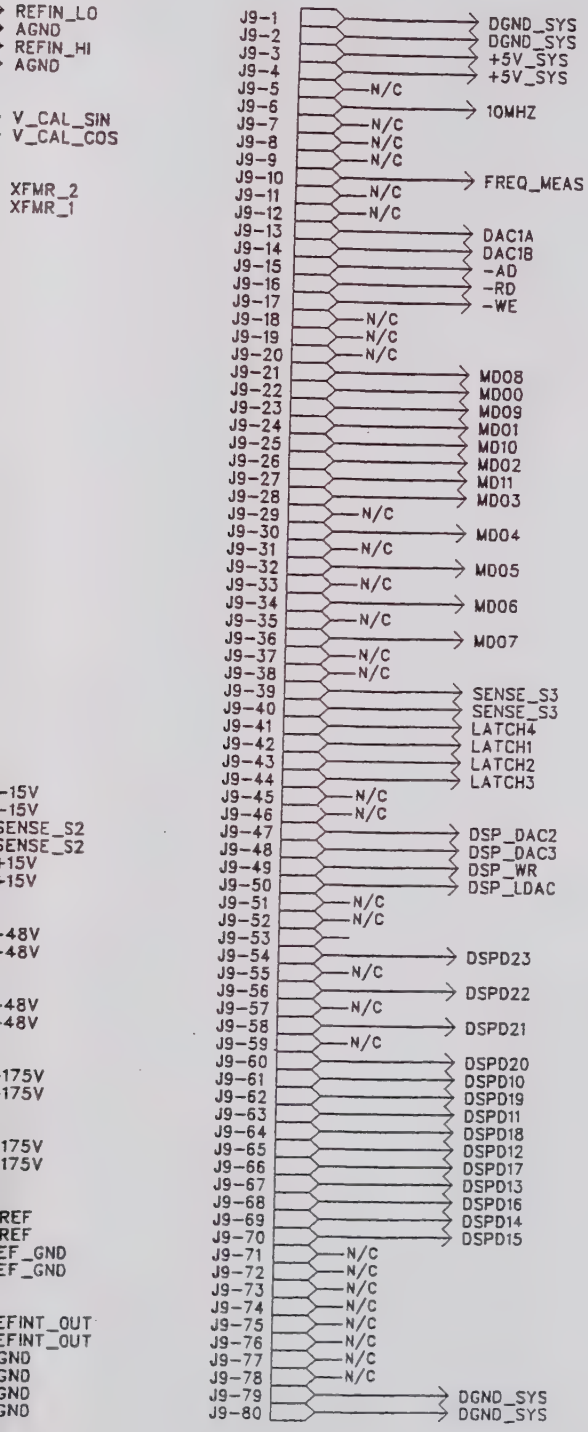

REVISIONS				
ZONE	LTR	DESCRIPTION	DATE	APPROVED
	1	FIRST DRAFT	4/28/94	

REF: P.W. BOARD 210072

NORTH ATLANTIC INSTRUMENTS INC.

SCHEMATIC DIAGRAM,

5300 ANALOG CARD CAGE EXTENDER

		SIZE		SHEET
784014	5300	B	770011	1 OF 4
NEXT ASSY	USED ON			REV A

CARD EDGE TO PLUG INTO

P1-1	N/C
P1-2	REFIN_LO
P1-3	N/C
P1-4	REFIN_HI
P1-5	AGND
P1-6	AGND
P1-7	AGND
P1-8	AGND
P1-9	N/C
P1-10	N/C
P1-11	N/C
P1-12	N/C
P1-13	N/C
P1-14	N/C
P1-15	N/C
P1-16	N/C
P1-17	N/C
P1-18	N/C
P1-19	N/C
P1-20	N/C
P1-21	COSD2
P1-22	COSD23
P1-23	COSD3
P1-24	COSD22
P1-25	COSD4
P1-26	COSD21
P1-27	COSD5
P1-28	COSD20
P1-29	COSD6
P1-30	COSD19
P1-31	COSD7
P1-32	COSD18
P1-33	COSD8
P1-34	COSD17
P1-35	COSD9
P1-36	COSD16
P1-37	COSD10
P1-38	COSD15
P1-39	COSD11
P1-40	COSD14
P1-41	C_T/H
P1-42	COSD13
P1-43	COS_CTL7
P1-44	COSD12
P1-45	COS_CTL5
P1-46	COS_CTL6
P1-47	COS_CTL11
P1-48	COS_CTL4
P1-49	COS_CTL10
P1-50	COS_CTL3
P1-51	COS_CTL9
P1-52	COS_CTL2
P1-53	COS_CTL8
P1-54	COS_CTL1
P1-55	N/C
P1-56	COS_CTL0
P1-57	N/C
P1-58	N/C
P1-59	SENSE_S2
P1-60	SENSE_S2

P1-61	S2
P1-62	S2
P1-63	S4
P1-64	S4
P1-65	SENSE_S2
P1-66	SENSE_S2
P1-67	SENSE_S4
P1-68	SENSE_S4
P1-69	SENSE_S2
P1-70	SENSE_S2
P1-71	-15V
P1-72	-15V
P1-73	-48V
P1-74	-48V
P1-75	+15V
P1-76	+15V
P1-77	+48V
P1-78	+48V
P1-79	N/C
P1-80	+175V
P1-81	+175V
P1-82	N/C
P1-83	N/C
P1-84	N/C
P1-85	-175V
P1-86	-175V
P1-87	N/C
P1-88	N/C
P1-89	N/C
P1-90	N/C
P1-91	N/C
P1-92	N/C
P1-93	N/C
P1-94	N/C
P1-95	REFINT_OUT
P1-96	REFINT_OUT
P1-97	AGND
P1-98	AGND
P1-99	AGND
P1-100	AGND
P1-101	N/C
P1-102	N/C
P1-103	+15V_COS
P1-104	-15V_COS
P1-105	+15V_COS
P1-106	-15V_COS
P1-107	-20V_COS
P1-108	-150V_COS
P1-109	+20V_COS
P1-110	+150V_COS
P1-111	+48V_COS
P1-112	-48V_COS
P1-113	+48V_COS
P1-114	-48V_COS
P1-115	AGND_COS
P1-116	AGND_COS
P1-117	AGND_COS
P1-118	AGND_COS
P1-119	C_SENSE_LO
P1-120	C_SENSE_LO

SYSTEM BOARD

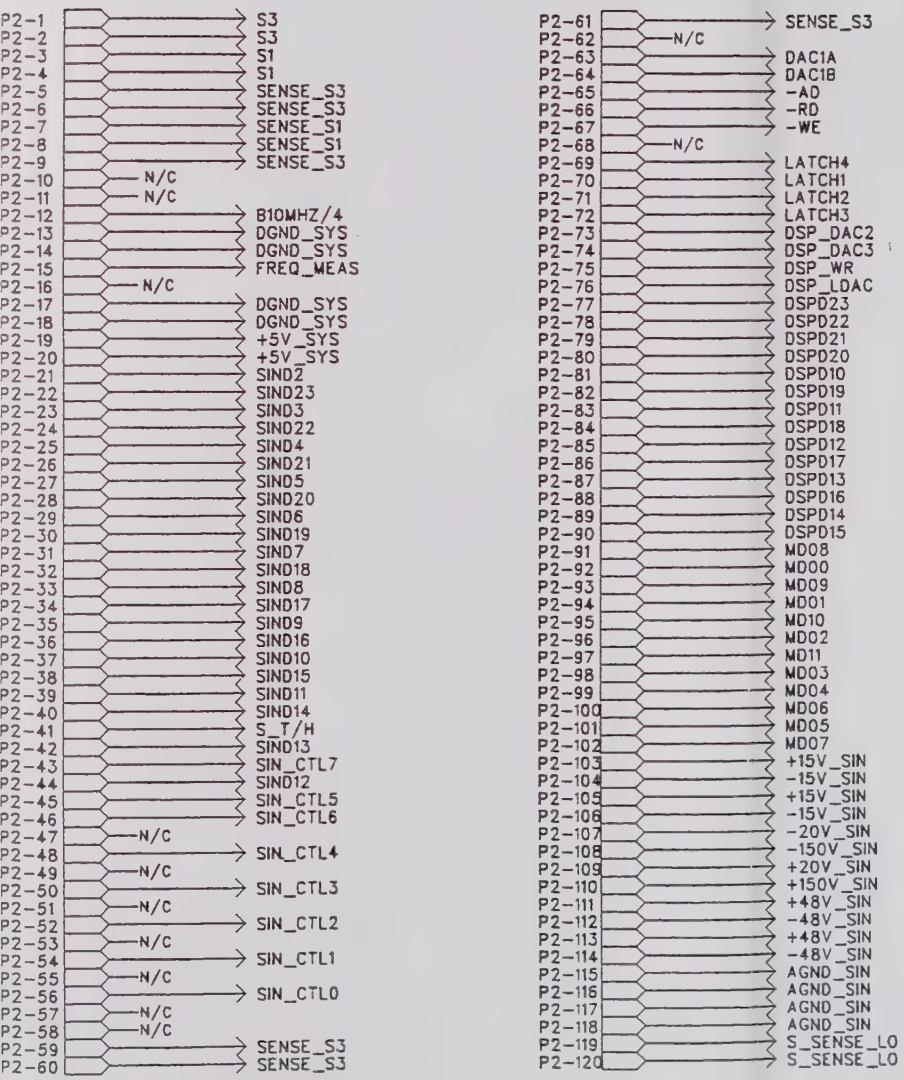

SIZE		SHEET	REV
B	770011	2 OF 4	A

CALIBRATION
BRIDGE TRANSFORMER

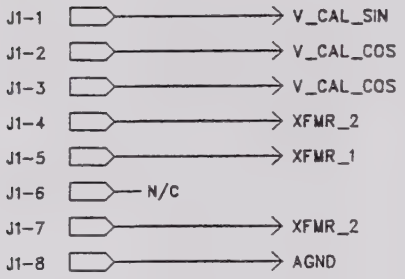

COSINE
ISOLATION TRANSFORMER

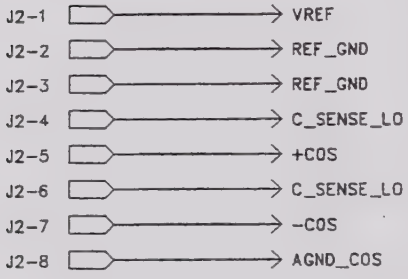

SINE
ISOLATION TRANSFORMER

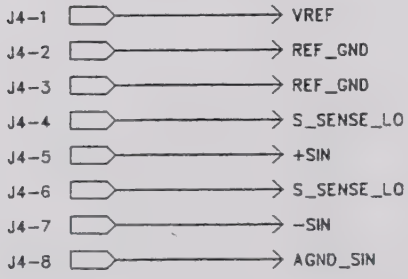

COSINE
TAPPED TRANSFORMER

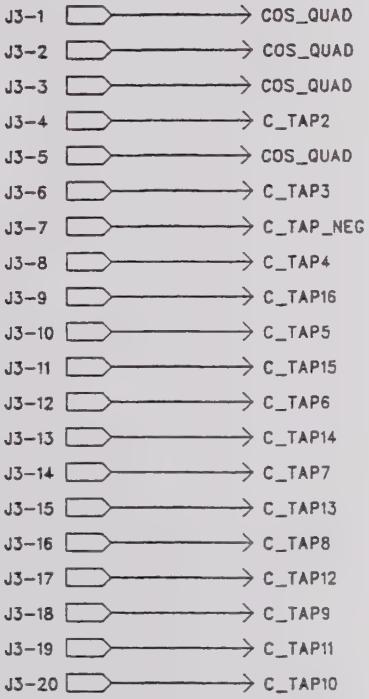

SINE
TAPPED TRANSFORMER

J5-1	SIN_QUAD
J5-2	SIN_QUAD
J5-3	SIN_QUAD
J5-4	S_TAP2
J5-5	SIN_QUAD
J5-6	S_TAP3
J5-7	S_TAP_NEG
J5-8	S_TAP4
J5-9	S_TAP16
J5-10	S_TAP5
J5-11	S_TAP15
J5-12	S_TAP6
J5-13	S_TAP14
J5-14	S_TAP7
J5-15	S_TAP13
J5-16	S_TAP8
J5-17	S_TAP12
J5-18	S_TAP9
J5-19	S_TAP11
J5-20	S_TAP10

MOUNTING HOLES (NO ELECTRICAL CONNECTION)

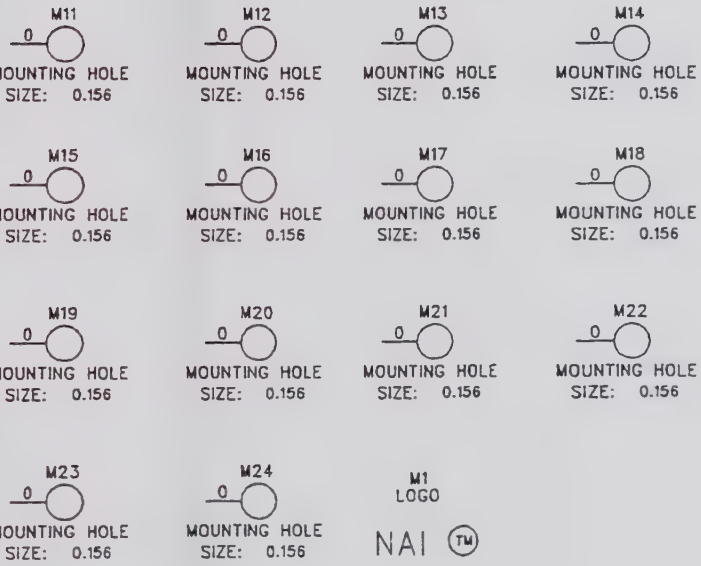

SIZE		SHEET	REV
B	770011	3 OF 4	A

CARD CAGE EXTENDE
(SAME CONNECTIONS AS SYST

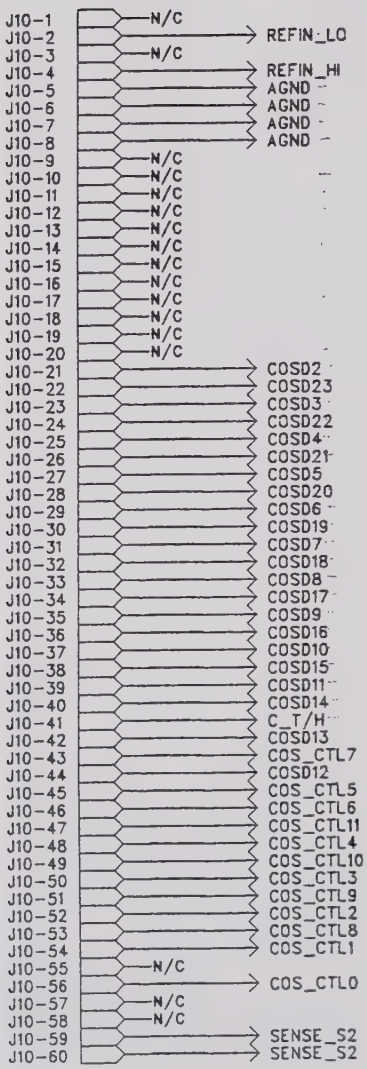

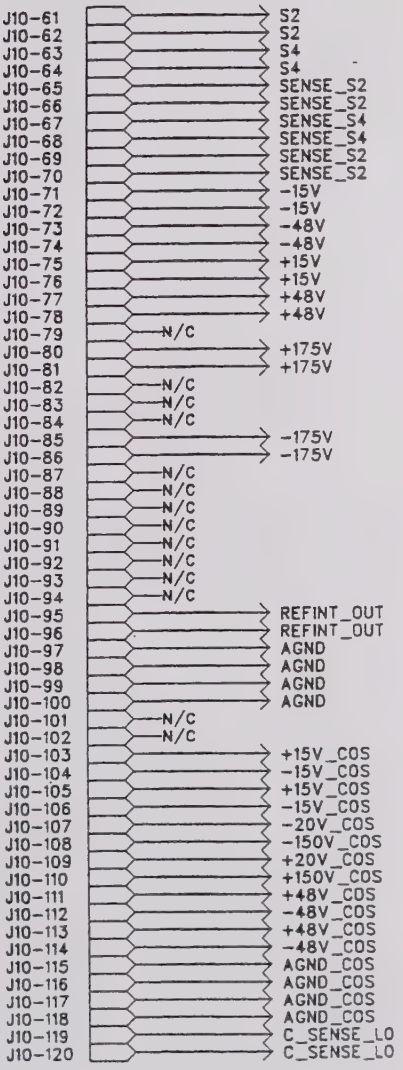

R SOCKETS
:M BOARD SOCKETS)

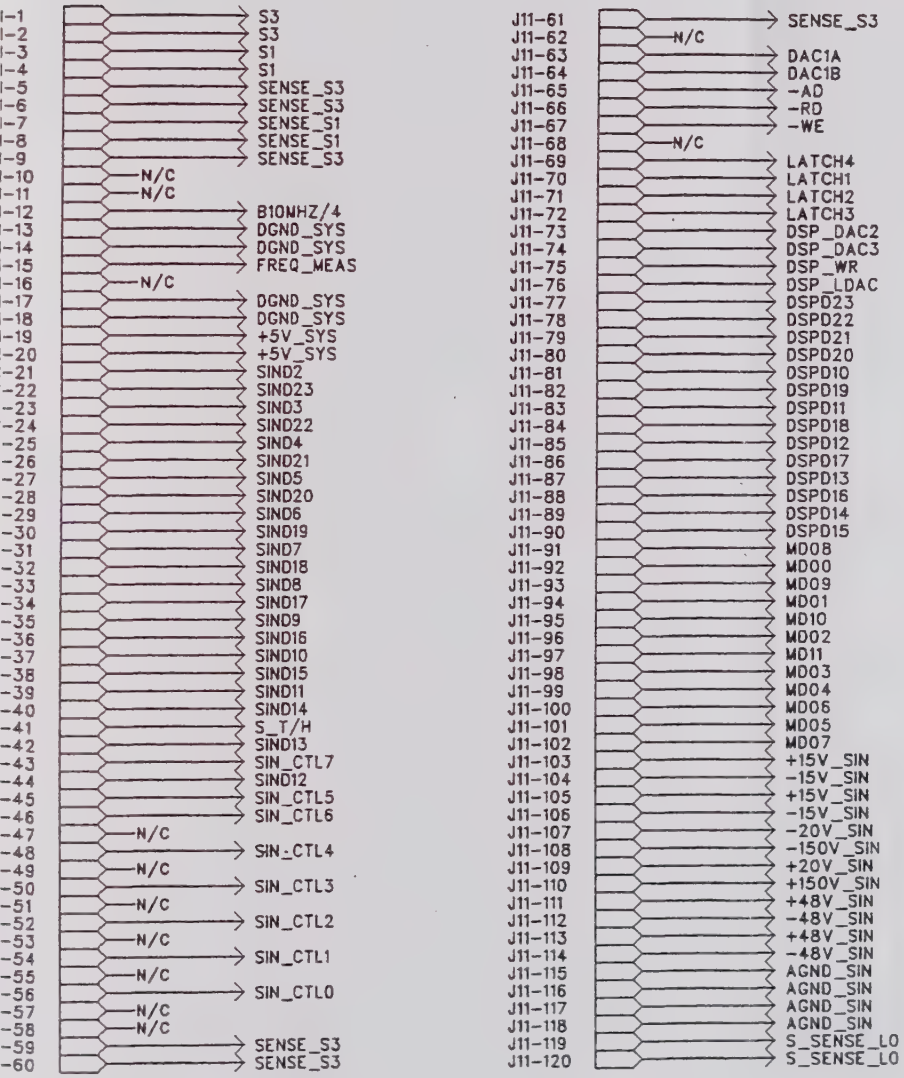

SIZE		SHEET	REV
B	770011	4 OF 4	A

GLOSSARY

Term	*Definition*
A	Assembly
A	Ampere
b	Blank
AC	Alternating current
AGC	Automatic gain control
AMPL	Amplitude
API	Angle position indicator
ATE	Automatic test equipment
C	Centigrade
C	Capacitor, reference designation
CA	Cable
CAL	Calibrate
CAP	Capacitor
CASS	Consolidated automatic support system
CCW	Counter clockwise
CHAPT.	Chapter
CONN	Connector
COS	Cosine
CR	Diode, signal; reference designation
cr	Carriage return
D	Diode, reference designation
DAV	Digitizing analog voltmeter
DC	Direct current
DEG	Degree
dp	Decimal point character
DSP	Digital signal processing
DSP#A##	DSP ADDRESS
DSP#D##	DSP DATA
EEPROM	Electrically erasable programmable read only memory
EPROM	Erasable programmable read only memory
ERR	Error
ESD	Electrostatic sensitive discharge
EXT	External
FL	Filter, reference designation
FPGA	Field programmable gate array
FREQ	Frequency
H	Height
HZ	Hertz
I/O	Input/output
IC	Integrated circuit
IEEE	Institute of Electrical, Electronic Engineers
INCR	Increment
INT	Internal
ISO	Isolated
J	Connector, reference designation
K	Relay, reference designation
KHZ	Kilohertz
L-L	Line-to-line
LED	Light emitting diode
lf	Line feed
LSB	Least significant bit
MA	milliampere
MA##	microprocessor address
MD##	microprocessor data
MDAC	Multiplying digital-to-analog converter
MFR	Manufacturer
MIL	Military

GLOSSARY (Cont'd.)

Term	*Definition*
MOD	Modulation
NAI	North Atlantic Industries
OOR	Out of range
OVLD	Overload
P	Page
P	Plug, reference designation
P-P	Peak-to-peak
PC	Personal computer
PGM	Program
PO	Phase offset
PP	Pages
PS	Power supply
Q	Transistor, reference designation
QTY	Quantity
R	Resistor, reference designation; Reference; Resolver
RAM	Random access memory
REF	Reference
REFDES	Reference designation
REM	Remote
RES	Resolver
RES	Resistor
RMS	Root-mean-square
ROM	Read only memory
RPS	Revolutions per second
RSS	Resolver/Synchro Standard
RST	Reset
MSB	Most significant bit

Term	*Definition*
MUX	Multiplexer
MV	Millivolt
SCPI	Standard commands for programmable instruments
SECT.	Section
SIM	Simulate
SIN	Sine
SRA	Shop replaceable assembly
SRQ	Service request
SYN	Synchro
T	Transformer, reference designation
T/H	Track/hold
TFI	test fixture
TP	Test point, reference designation
TST	Test
U	Integrated circuit, reference designation
UOC	Usable-on-code
V	Volt; Velocity
VAC	Volts, alternating current
VDC	Volts, direct current
VEL	Velocity
VR	Zener diode, reference designation
vs	Versus
W	Width
XTAL	Crystal

WARRANTY

A. The seller warrants products against defects in material and workmanship for one year from the date of original shipment. The seller's liability is limited to the repair or replacement of products which prove to be defective during the warranty period. There is no charge under the warranty except for transportation charges. The purchaser shall be responsible for products shipped until received by the seller.

B. The seller specifically excludes from the warranty 1) calibration, 2) fuses, and 3) normal mechanical wear, e.g.: end-of-life on assemblies such as switches, relays, gear trains, etc. is dependent upon number of operations or hours of use, and end-of-life may occur within the warranty period.

C. The seller is not liable for consequential damages or for any injury or damage to persons or property resulting from the operation or application of products.

D. The warranty is voided if there is evidence that products have been operated beyond their design range, improperly installed, improperly maintained or physically mistreated.

E. The seller reserves the right to make changes and improvements to products without any liability for incorporating such changes or improvements in any products previously sold, or for any notification to the purchaser prior to shipment. In the event the purchaser should require subsequently manufactured lots to be identical to those covered by this quotation, the seller will, upon written request, provide a quotation upon a change control program.

F. No other warranty expressed or implied is offered by the seller other than the forgoing.

CLAIMS FOR DAMAGE IN SHIPMENT

The purchaser should inspect and functionally test the product(s) in accordance with the instruction manual as soon as it is received. If the product is damaged in any way, including concealed damage, a claim should be filed immediately with the carrier, or if insured separately, with the purchaser's insurance company.

SHIPPING

On products to be returned under warranty, await receipt of shipping instructions then forward the instrument prepaid to the destination indicated. The original shipping container with their appropriate blocking and isolating material is the preferred method of packaging. Any other suitable strong container may be used providing the product is wrapped in a sealed plastic bag and surrounded with at least four inches of shock absorbing material to cushion firmly, preventing movement inside the container.

64085